GRUNDIG

# TV Service Manual

1. Ergänzung / Supplement 1

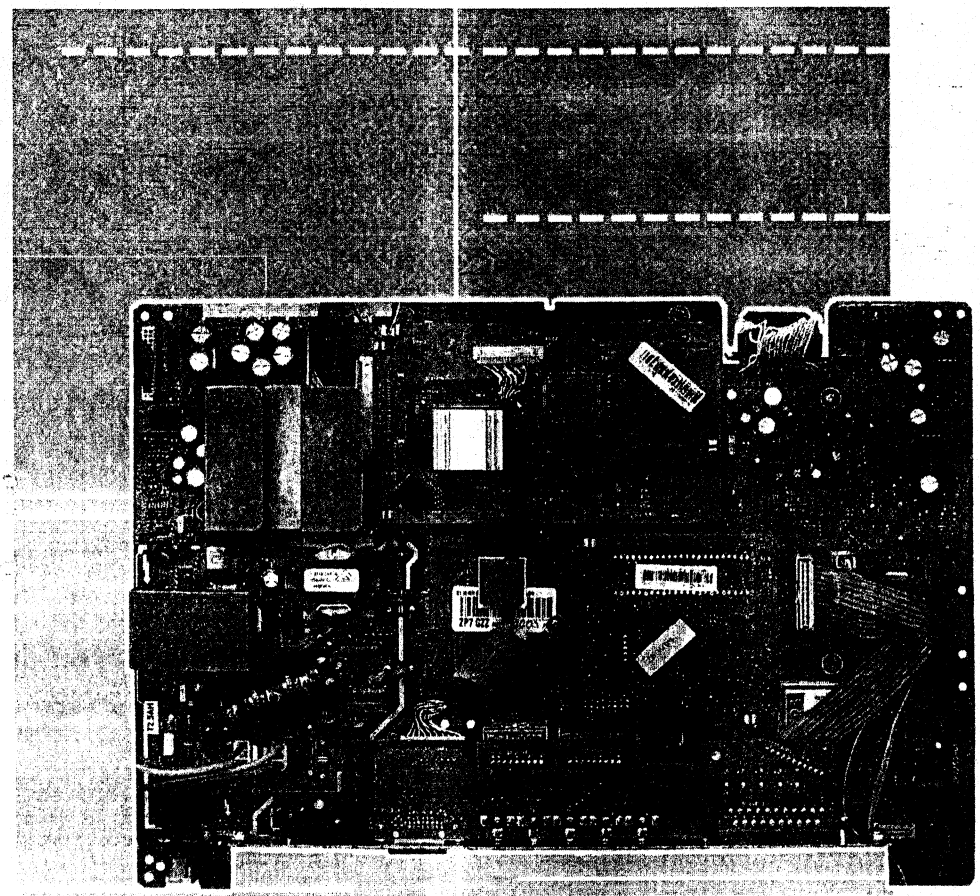

## Chassis G1

**FineArts 30**
**LXW 78-8520 Dolby**
GBD2500

**Tharus 26**
**LXW 68-9520 Dolby**
GBA5350

**Tharus 30**
**LXW 76-9520 Dolby**
GBB1750

NUR FÜR INTERNEN GEBRAUCH
FOR INTERNAL USE ONLY

Zusätzlich erforderliche Unterlagen für den Komplettservice
Additionally required Service Documents for the Complete Service

| Service Manual | Service Manual |
|---|---|
| Sicherheit<br>Safety | Chassis<br>G1 |
| Materialnr./Part No.<br>720108000001 | Materialnr./Part No.<br>720100516000 |

Materialnummer / Part Number 720100516100
Änderungen vorbehalten / Subject to alteration
H-S41 • 1005
http://www.grundig.com

Es gelten die Vorschriften und Sicherheitshinweise gemäß dem Service Manual "Sicherheit", Materialnummer 720108000001, sowie zusätzlich die eventuell abweichenden, landesspezifischen Vorschriften!

The regulations and safety instructions shall be valid as provided by the "Safety" Service Manual, part number 720108000001, as well as the respective national deviations.

## Inhaltsverzeichnis

Seite

**Allgemeiner Teil ..... 2...4**
Allgemeine Hinweise ..... 2
Technische Daten ..... 3

**Platinenabbildungen und Schaltpläne ..... 5**
Scaler-Platte – DVI & RGB Konverter ..... 5

**Ersatzteillisten ..... 6...9**

## Table of Contents

Page

**General Section ..... 2...4**
General Notes ..... 2
Technical Data ..... 3

**Layout of the PCBs and Circuit Diagrams ..... 5**
Scaler Board – DVI & RGB Converter ..... 5

**Spare Parts Lists ..... 6...9**

## Allgemeiner Teil

### Einführung

In dieser Service-Manual-Ergänzung sind weitere Gerätevarianten dokumentiert, die mit dem Chassis G1 ausgestattet sind. Des Weiteren sind geänderte Schaltpläne enthalten.

**Hinweis:**
Grundlage für den Service sind folgende Service Manuals:
- Service Manual Sicherheit, Materialnummer 720108000001
- Service Manual Chassis G1, Materialnummer 720100516000

## Allgemeine Hinweise

**Vor dem Öffnen des Gehäuses den Netzstecker ziehen!**

**Achtung: ESD-Vorschriften beachten**

**Leitungsverlegung**
Bevor Sie die Leitungen und insbesondere die Masseleitungen lösen, muss die Leitungsverlegung zu den einzelnen Baugruppen beachtet werden.
Nach erfolgter Reparatur ist es notwendig, die Leitungsführung wieder in den werkseitigen Zustand zu versetzen um evtl. spätere Ausfälle oder Störungen zu vermeiden.

**Durchführen von Messungen**
Bei Messungen mit dem Oszilloskop an Halbleitern sollten Sie nur Tastköpfe mit 10:1 - Teiler verwenden. Außerdem ist zu beachten, dass nach vorheriger Messung mit AC-Kopplung der Koppelkondensator des Oszilloskops aufgeladen sein kann. Durch die Entladung über das Messobjekt können Bauteile beschädigt werden.

**Messwerte und Oszillogramme**
Bei den in den Schaltplänen und Oszillogrammen angegebenen Messwerten handelt es sich um Näherungswerte!

## General Section

### Introduction

This Supplement of Service Manual describes variants of alternative devices embedded with chassis G1. The modified circuit diagrams are included.

**Note:**
Basic instructions for servicing are given in the following Service Manuals:
- Service Manual Safety, Part Number 720108000001
- Service Manual Chassis G1, Part Number 720100516000

## General Notes

**Before opening the cabinet disconnect the mains plug!**

**Attention: Observe the ESD safety regulations**

**Wiring**
Before disconnecting any leads and especially the earth connecting leads observe the way they are routed to the individual assemblies. On completion of the repairs the leads must be laid out as originally fitted at the factory to avoid later failures or disturbances.

**Carrying out Measurements**
When making measurements on semi-conductors with an oscilloscope, ensure that the test probe is set to 10:1 dividing factor. If the previous measurement was made on AC input, please note that the coupling capacitor in the oscilloscope will be charged. Discharge via the item being checked can damage the components.

**Measured Values and Oscillograms**
The measured values given in the circuit diagrams and oscillograms are approximates!

# Technische Daten / Technical Data

| | Fine Arts 30 LXW 79-9520 Dolby | Thorus 30 LXW 79-9520 Dolby | Thorus 26 LXW 80-9520 Dolby |
|---|---|---|---|
| Order No. | G.BD 25-00 | G.BB 17-50 | G.BA 53-50 |
| Destination | D,A,CH, NL,N,S | All NSOs | All NSOs |
| Approbations | CE | CE,C-TICK,ME67 | CE,C-TICK,ME67 |
| IM-Languages | D,GB,F,I,NL,N,S | D,GB,F,I,NL,DK,N,S,FIN,E,P,PL,TR | D,GB,F,I,NL,DK,N,S,FIN,E,P,PL,TR |
| EAN | 40 13833-60014 5 | 40 13833-60168 5 | 40 13833-60165 4 |
| Develop. order No. | H1U | H1W | H1V |
| Remote control | TP 110 C | TP 150 C | TP 150 C |
| visible | 30" / 76cm | 30" / 76cm | 26" / 66cm |
| Color | silver | silver | silver/black frame |
| **DISPLAY** | | | |
| Panel (Clear Color Screen Active Matrix TFT-LC-Display) | 30" / 76cm | 30" / 76cm | 26" / 66cm |
| 16:9 wide-screen format | ● | | |
| Panel driving technology | MVA | | |
| Response time | ca. 16ms | | |
| Brightness | ca. 600cd/m2 | ca. 600cd/m2 | ca. 500cd/m2 |
| Contrast ratio | ca. 600:1 | | |
| Viewing angle | ca. 170° vertical / 170° horizontal | | |
| Physical display resolution max. pixel | WXGA 1280 x 768 | | |
| **PICTURE** | | | |
| Digital Reference-Plus-Technology (Motion Adaption) | ○ | | |
| Line Flicker Reduction | ○ | | |
| Motion Adaptive Deinterlacing | ● | | |
| Digital Color Transition Improv. (DCTI) | ● | | |
| Digital Combfilter | ● (3D) | | |
| Digital Luminance Transition Improv. (DLTI) | ● | | |
| Picture Noise Reduction (DNR) | ● (temporal) | | |
| CCS (Clear Color Screen) | ● | | |
| Preset picture modes | ● | | |
| Aspect ratios (Format switching) | 16:9 / 14:9 / 4:3 | | |
| PIP | ○, only Picture in Text / Picture in EPG | | |
| Multifold Tuner scan (Mosaic Picture) | ○ | | |
| PAT: Split screen (PICTURE + TEXT) | ● | | |
| PAP: Double window (PICTURE + PICTURE) | ○ | | |
| P2AT: Double window + TXT | ○ | | |
| POP: PICTURE on PICTURE | ○ | | |
| Picture freezing | ● | | |
| Zoom with point function | ○ | | |
| Auto 16:9 selection via Scart | ● | | |
| Sharpness control | ●, 3D-engine | | |
| Blue Background | ● | | |
| **CHASSIS** | | | |
| TV-Chassis | G1 (Digi 100 Progressive) | | |
| Progressive | ● | | |
| Tuner | PLL frequency synthesizer tuning | | |
| µ-Processor | Micronas M2 SDA 6000, 32 Mbit flash + 64 Mbit SDRAM | | |
| Keyboard | ○ | | |
| **ELECTRONIC** | | | |
| Stand by indicator | red LED | | |
| EPG (Electronic Programme Guide) | ● | | |
| Easy Dialog | ● | | |
| Megalogic | ● | | |
| Manual & autom. labeling of prog. | 5 characters | | |
| Programmable off timer | ● | | |
| Programmable on timer | ● | | |
| Intelligent channel search (Zapping funct.) | ● | | |
| Programme Edit | ● | | |
| Intelligent Programme Switch | ● | | |
| Auto switch off | ● | | |
| Programme memory TV/AV (opt.) | 99/7 | | |
| Teletext/Fasttext/Toptext | ● / ● / ● | | |
| Teletext options | 2000 pages, Level 2.5 | | |
| Childlock | ● | | |
| Youth free recognition | ○ | | |
| Menue languages OSD | 20 languages, D, GB, F, I, E, P, NL, HR, RUS, GR, DK, S, FIN, N, TR, PL, CZ, SK, SLO, H | | |
| SWAP (Recall function) | ● | | |
| Service mode | ● | | |
| Hotel mode | ○ | | |
| **TUNING** | | | |
| Autom. Tuning System with country selection | ●, full automatic sorting | | |
| Frequency Based Auto Search | ● | | |
| Automatic Micro-search | ● | | |
| Automatic Programming | ● | | |
| Manual fine tuning | ● | | |
| Direct channel selection | ● | | |
| Direct frequency selection | ○ | | |
| PAL/SECAM/BG/DK/I/L'/L | ● | | |
| NTSC-Playback via Scart (3,58/4,43) | ● | | |
| PAL M/N, NTSC M | NTSC M only via Scart | | |
| Cable TV / Hyperband (S1-S41) | ● | | |

| | Fine Arts 30 LXW 78-8520 Dolby | Tharus 30 LXW 78-8520 Dolby | Tharus 26 LXW 88-8520 Dolby |
|---|---|---|---|
| **AUDIO** | | | |
| Mono/Stereo/Nicam | ● / ● / ● | | |
| AV Stereo | ● | | |
| Loudspeaker | 2 high-middle loudspeaker and 1 bass loudspeaker | | |
| Virtual Dolby | ● | | |
| Matched Sound Delay (Lip synchronous) | ● | | |
| Subwoofer | 10/20W music/nominal power | | |
| Dynamic Bass | ○ | | |
| DSP (Digital Sound Processor) | ○ | | |
| Balance Adjustment | ● | | |
| AVL (Audio Volume Level) | ● | | |
| PIP listening via Headphone jack | ○ | | |
| Equalizer | 7 Band | | |
| Space Sound Effect | ● | | |
| Audio mode | ● | | |
| Audio amplifier without extern LS | 2 x 6/10W music/nominal power (R/L) + 10/20W music/nominal power (SW) | | |
| **POWER SUPPLY / CABINET** | | | |
| Power voltage | 230V~, 50/60Hz | | |
| Range of regulation | 190-264V, 50/60Hz, in accordance to IEC 65 | | |
| Power switch | ● | | |
| Integrated supply | ● | | |
| Plug-in AC adaptor | ○ | | |
| Power consumption | ca. 140W, standby < 1W | | ca. 130W, standby < 1W |
| Cabinet (WxHxD, cm) | 79,6 x 59,3 x 12,9cm (18,6cm with stand) | 72 x 58 x 11cm (19cm with stand) | 72 x 58 x 11cm (19cm with stand) |
| Weight | ca. 23,2kg | ca. 16kg | ca. 16kg |
| **REAR PANEL CONNECTIONS** | | | |
| Euro-AV-Socket AV1 | CVBS in-/output, RGB input | | |
| Euro-AV Socket AV2 | CVBS in-/output, RGB input | | |
| Euro-AV Socket AV3 | ○ | | |
| S-Video | ● / via Scart | | |
| Camera-AV | 3x Cinch socket in | | |
| Wireless | Video-in, Audio-in, 12V- out | | |
| YUV input / progressive | Video-in: 3 x Cinch, Audio-in: 2 x Cinch | | |
| PC-input (Sub D 15) | Multisync SXGA, WXGA | | |
| PC-Audio in | 3,5mm jack Stereo | | |
| DVI | DVI-D | | |
| HDCP | ● | | |
| HDMI | ○ | | |
| Headphones | 3.5mm jack | | |
| Audio out | ○ | | |
| Antenna for terrestrial reception | 1 x Coaxial-socket for TV-tuner-in, according to DIN 45325 | | |
| DC-connector | ○ | | |
| Power supply plug | Power cord plug-in type | | |
| **SUPPLIED ACCESSORIES** | | | |
| Remote control (incl. battery) | ● | | |
| Power cord | ● | | |
| Cables | ○ | | |
| Instruction manual | ● | | |
| Circuit diagram | ○ | | |
| Wall fixture integrated | ○ | | |
| Warranty info | ● | | |

# Scaler-Platte – DVI & RGB Konverter
# Scaler Board – DVI & RGB Converter

| Spannungen Voltages | |
|---|---|
| +B | 24V |
| +F | 5V |
| +H | 3.3V |
| +LVDS | 12V |
| +M | 13V |
| +N | 3.3V |
| +OE | 10.2V |
| +Q | 8.3V |
| +S | 5V |
| -R | -8V |

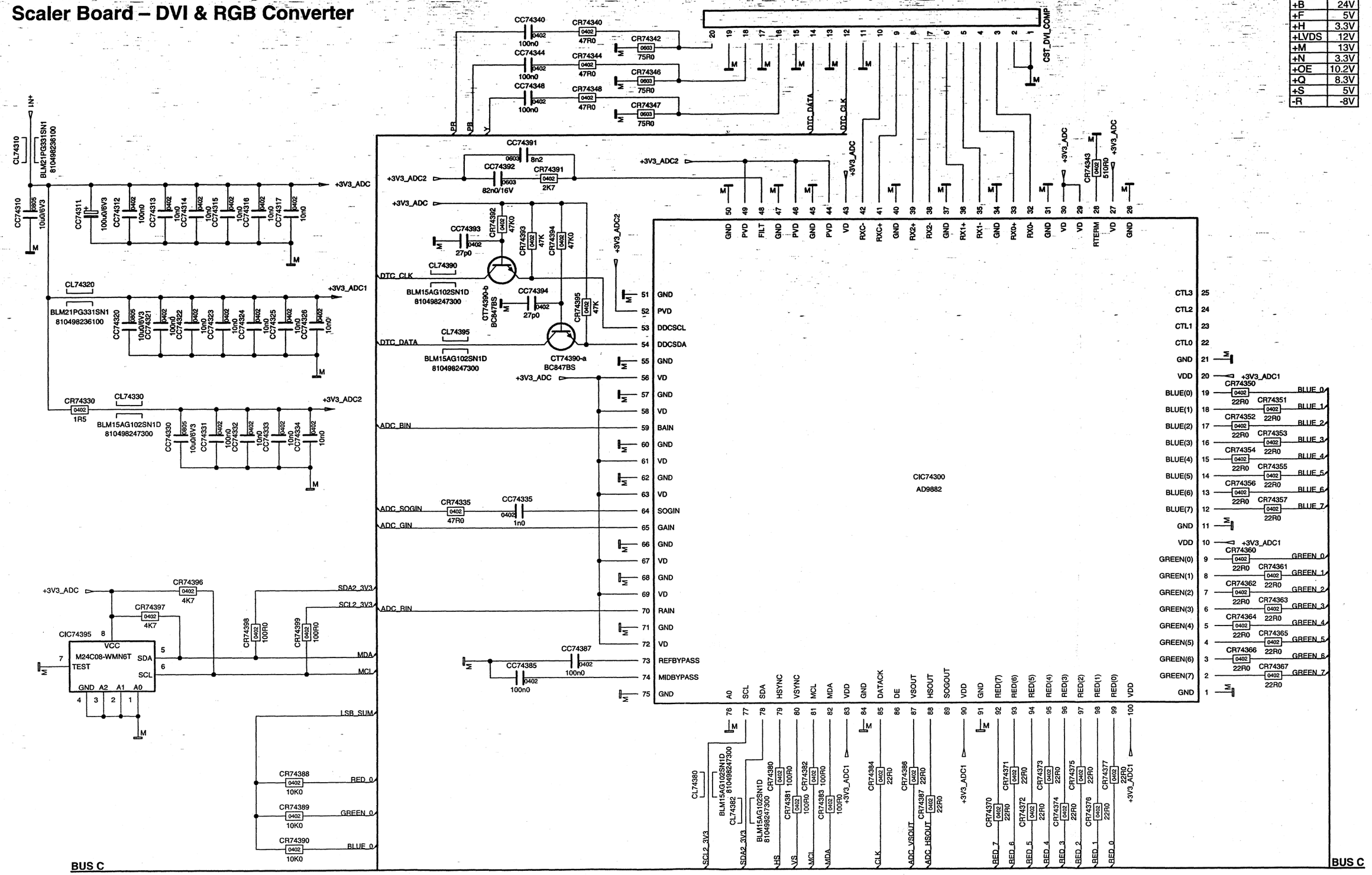

GRUNDIG

Ersatzteilliste
Spare Parts List

NUR FÜR INTERNEN GEBRAUCH
FOR INTERNAL USE ONLY

**TV**

## 8 / 2005

## FINE ARTS 30 LXW 78-8520 DOLBY

MATERIAL-NR. / PART NO.: 720126018600
BESTELL-NR. / ORDER NO.: GBD2500

| POS. NR. POS. NO. | ABB. FIG. | MATERIAL-NR. PART NUMBER | ANZ. QTY. | BEZEICHNUNG (D) | DESCRIPTION (GB) |
|---|---|---|---|---|---|
| | | 720126018600 | | FINEARTS 30 LXW 78-8520 DOLBY<br>KEIN E-TEIL | FINEARTS 30 LXW 78-8520 DOLBY<br>NO SPARE PART |
| 0001.000 | | 759551178200 | | GEH.-VORDERTEIL SILBER | FRONT CABINET SILVER |
| 0002.000 | | 759551097000 | | RUECKWAND | REAR COVER |
| 0003.000 | | 759551131100 | | GRILL LAUTSPRECHER SILBER | GRILLE LOUDSPEAKER SILVER |
| 0004.000 | ⚠ | 275990147300 | X | LP-CHASSISMODUL G1 | CHASSISBOARD G1 |
| 0005.000 | | 275990136700 | | LP-M2 MODUL | M2 BOARD |
| 0006.000 | | 275990035700 | | LP-FRONT PANELMODUL | FRONT PANEELBOARD |
| 0007.000 | | 275990137000 | | LP-SASI-PFC MODUL | SASI-PFC BOARD |
| 0008.000 | | 275990137200 | | LP-SASI FRONT-AV MODUL | SASI FRONT-AV-BOARD |
| 0009.000 | | 275990148200 | | LP-SCALERMODUL G1 | SCALERBOARD G1 |
| 0010.000 | ⚠ | 759551115600 | | LCD DISPLAY T296XW01 | LCD DISPLAY T296XW01 |
| 0011.000 | | 759551130800 | | KNOPF NETZ | KNOB POWER |
| 0012.000 | | 759551097100 | | LAUTSPRECHER 10 W / 4 OHM | LOUDSPEAKER 10 W / 4 OHM |
| 0013.000 | | 759551097200 | | HOCHTONLAUTSPRECHER 8 W / 8 OHM | TWEETER 8 W / 8 OHM |
| 0014.000 | | 759551178400 | | FUSS SILBER | FOOT SILVER |
| 0015.000 | ⚠ | 759551178300 | | NETZKABEL SILBER | POWER CABLE SILVER |
| 0016.000 | | 759551130600 | | VORDERTEIL SILBER SOUND SYSTEM | FRONT SILVER SOUND SYSTEM |
| 0017.000 | | 759551130700 | | RUECKTEIL SILBER SOUND SYSTEM | BACK COVER SILVER SOUND SYSTEM |
| 0020.000 | | 296420414202 | | FERNBEDIENUNG TP110 C | REMOTE CONTROL TP110 C |
| | | 720117184000 | | BEDIENUNGSANLEITUNG D/GB/F/I/NL/TR/PL | INSTRUCTION MANUAL D/GB/F/I/NL/TR/PL |
| | | 720117184100 | | BEDIENUNGSANLEITUNG S/DK/N/FIN/E/P | INSTRUCTION MANUAL S/DK/N/FIN/E/P |
| | | 720110056000 | | SERVCIE MANUAL D/GB | SERVCIE MANUAL D/GB |
| | | 720110056100 | | SERVCIE MANUAL D/GB 1. ERGAENZUNG | SERVICE MANUAL D/GB 1ST SUPPLEMENT |
| | | 720108000001 | | SICHERHEITSMANUAL D/GB/E/F/I | SAFETY SERVICE MANUAL D/GB/E/F/I |

X = SIEHE GESONDERTE E-LISTE

X = SEE SEPARATE PARTS LIST

Es gelten die Vorschriften und Sicherheitshinweise gemäß dem Service Manual "Sicherheit", Mat.-Nummer 720108000001, sowie zusätzlich die eventuell abweichenden, landesspezifischen Vorschriften!

The regulations and safety instructions shall be valid as provided by the "Safety" Service Manual, part number 720108000001, as well as the respective national deviations.

ÄNDERUNGEN VORBEHALTEN / SUBJECT TO ALTERATION

GRUNDIG

Ersatzteilliste
Spare Parts List

NUR FÜR INTERNEN GEBRAUCH
FOR INTERNAL USE ONLY

**TV**

## 8 / 2005

## THARUS 26 LXW 68-9520 DOLBY

MATERIAL-NR. / PART NO.: 720126017800
BESTELL-NR. / ORDER NO.: GBA5350

| POS. NR. POS. NO. | ABB. FIG. | MATERIAL-NR. PART NUMBER | ANZ. QTY. | BEZEICHNUNG (D) | DESCRIPTION (GB) |
|---|---|---|---|---|---|
| | | 720126017800 | | THARUS 26 LXW 68-9520 DOLBY<br>KEIN E-TEIL | THARUS 26 LXW 68-9520 DOLBY<br>NO SPARE PART |
| 0001.000 | | 759551175500 | | GEH.-VORDERTEIL SILBER | FRONT CABINET SILVER |
| 0002.000 | | 759551175400 | | ABDECKUNG FRONT | FRONT COVER |
| 0003.000 | | 759551130500 | | RUECKWAND LIQUA BLUE | BACK COVER LIQUA BLUE |
| 0004.000 | | 759551097300 | | LAUTSPRECHERGRILL SILBER | SPEAKER GRILL SILVER |
| 0005.000 | ⚠ | 275990147100 | X | LP-G1-CHASSISMODUL | CHASSIS BOARD G1 |
| 0006.000 | | 275990207100 | | LP-FRONT PANEELMODUL | FRONT PANEELBOARD |
| 0007.000 | | 275990207200 | | LP-SASI PFC MODUL | SASI PFC BOARD |
| 0008.000 | | 275990207300 | | LP-SASI FRONT AV MODUL | SASI FRONT AV BOARD |
| 0009.000 | | 275990147200 | | LP-SCALERMODUL G1 | SCALERBOARD G1 |
| 0010.000 | ⚠ | 759551100900 | | LCD DISPLAY 26" | LCD DISPLAY 26" |
| 0011.000 | | 759551175300 | | KNOPF NETZ | KNOB POWER |
| 0012.000 | | 759551097100 | | LAUTSPRECHER 10 W / 4 OHM | LOUDSPEAKER 10 W / 4 OHM |
| 0013.000 | | 759551097200 | | HOCHTONLAUTSPRECHER 8 W / 8 OH | TWEETER 8 W / 8 OHM |
| 0015.000 | ⚠ | 759880571000 | | NETZKABEL | POWER CORD |
| 0016.000 | | 759551130600 | | VORDERTEIL SILBER SOUND SYSTEM | FRONT SILVER SOUND SYSTEM |
| 0020.000 | | 296420660600 | | TP 150 C FERNBEDIENUNG | TP 150 C REMOTE CONTROL |
| | | 720117184000 | | BEDIENUNGSANLEITUNG D/GB/F/I/NL/TR/PL | INSTRUCTION MANUAL D/GB/F/I/NL/TR/PL |
| | | 720117184100 | | BEDIENUNGSANLEITUNG S/DK/N/FIN/E/P | INSTRUCTION MANUAL S/DK/N/FIN/E/P |
| | | 720110056000 | | SERVCIE MANUAL D/GB | SERVCIE MANUAL D/GB |
| | | 720110056100 | | SERVCIE MANUAL D/GB 1. ERGAENZUNG | SERVICE MANUAL D/GB 1ST SUPPLEMENT |
| | | 720108000001 | | SICHERHEITSMANUAL D/GB/E/F/I | SAFETY SERVICE MANUAL D/GB/E/F/I |

X = SIEHE GESONDERTE E-LISTE

X = SEE SEPARATE PARTS LIST

Es gelten die Vorschriften und Sicherheitshinweise gemäß dem Service Manual "Sicherheit", Mat.-Nummer 720108000001, sowie zusätzlich die eventuell abweichenden, landesspezifischen Vorschriften!

The regulations and safety instructions shall be valid as provided by the "Safety" Service Manual, part number 720108000001, as well as the respective national deviations.

ÄNDERUNGEN VORBEHALTEN / SUBJECT TO ALTERATION

# GRUNDIG

Ersatzteilliste
Spare Parts List

NUR FÜR INTERNEN GEBRAUCH
FOR INTERNAL USE ONLY

**TV**

## 7 / 2005

## LP-CHASSISMODUL G1
## CHASSIS BOARD G1

MATERIAL-NR. / PART NO.: 275990147300

| POS. NR. POS. NO. | ABB. FIG. | MATERIAL-NR. PART NUMBER | ANZ. QTY. | BEZEICHNUNG (D) | DESCRIPTION (GB) |
|---|---|---|---|---|---|
| | | 275990147300 | | LP-G1-CHASSISMODUL | CHASSIS BOARD G1 |

| POS. NR. POS. NO. | MATERIAL-NR. PART NUMBER | BEZEICHNUNG DESCRIPTION |
|---|---|---|
| BUAV 2 | 759551101600 | S-VHS BUCHSE |
| BUEU 1 | 759550988800 | SCARTBUCHSE |
| BUKH 1 | 759551175900 | BUCHSE STEREO |
| BUVG | 759551175900 | BUCHSE STEREO |
| C 60500 ⚠ | 759551146100 | KONDENS. 1 NF 400 VAC |
| C 60579 | 853151068700 | MKT 15 0,033UF 20% 630V |
| C 60590 ⚠ | 759551146100 | KONDENS. 1 NF 400 VAC |
| C 62506 ⚠ | 759551146100 | KONDENS. 1 NF 400 VAC |
| C 62507 ⚠ | 759551146100 | KONDENS. 1 NF 400 VAC |
| CD 29547 | 830953414900 | MELF-DIODE LL 4148 TFK/ITT |
| CD 29554 | 830953414900 | MELF-DIODE LL 4148 TFK/ITT |
| CD 29556 | 830953414900 | MELF-DIODE LL 4148 TFK/ITT |
| CD 29557 | 830953414900 | MELF-DIODE LL 4148 TFK/ITT |
| CD 31014 | 830953414900 | MELF-DIODE LL 4148 TFK/ITT |
| CD 32014 | 830940159200 | SMD DIODE BA591/BA592/BA782 |
| CD 32017 | 830940159200 | SMD DIODE BA591/BA592/BA782 |
| CD 32031 | 830953414900 | MELF-DIODE LL 4148 TFK/ITT |
| CD 40501 | 830953414900 | MELF-DIODE LL 4148 TFK/ITT |
| CD 40522 | 759551098400 | DIODE Z9.1V 1.5W |
| CD 40554 | 830953414900 | MELF-DIODE LL 4148 TFK/ITT |
| CD 41514 | 830953414900 | MELF-DIODE LL 4148 TFK/ITT |
| CD 43694 | 830953414900 | MELF-DIODE LL 4148 TFK/ITT |
| CD 43696 | 830953414900 | MELF-DIODE LL 4148 TFK/ITT |
| CD 60539 | 830953414900 | MELF-DIODE LL 4148 TFK/ITT |
| CD 60540 | 759551098500 | DIODE 18 V 5 W |
| CD 60547 | 830953414900 | MELF-DIODE LL 4148 TFK/ITT |
| CD 60561 | 830953414900 | MELF-DIODE LL 4148 TFK/ITT |
| CD 60571 | 759551116000 | DIODE LL 42 |
| CD 60572 | 830953414900 | MELF-DIODE LL 4148 TFK/ITT |
| CD 60585 | 830953414900 | MELF-DIODE LL 4148 TFK/ITT |
| CD 61501 | 759551098400 | DIODE Z9.1V 1.5W |
| CD 61502 | 759551098400 | DIODE Z9.1V 1.5W |
| CD 61503 | 759551098400 | DIODE Z9.1V 1.5W |
| CD 61504 | 830953414900 | MELF-DIODE LL 4148 TFK/ITT |
| CD 61505 | 830953414900 | MELF-DIODE LL 4148 TFK/ITT |
| CD 61506 | 830953414900 | MELF-DIODE LL 4148 TFK/ITT |
| CD 61530 | 830953414900 | MELF-DIODE LL 4148 TFK/ITT |
| CD 61822 | 830953414900 | MELF-DIODE LL 4148 TFK/ITT |
| CD 61833 | 759551098600 | DIODE STPS340U |
| CD 61900 | 759551098600 | DIODE STPS340U |
| CD 61902 | 759551098400 | DIODE Z9.1V 1.5W |
| CD 80510 | 830953414900 | MELF-DIODE LL 4148 TFK/ITT |
| CIC29550 | 720086707300 | SW/IC AT24C08AN-10SI-2.7 |
| CIC31010 | 759551115900 | SW/IC AT24C08AN-10SI-2.7 |

| POS. NR. POS. NO. | MATERIAL-NR. PART NUMBER | BEZEICHNUNG DESCRIPTION |
|---|---|---|
| CIC31015 | 759551097700 | IC BA6161F-E2 |
| CIC32040 | 830584988600 | SMD IC TDA9886T-V3 PHI >> |
| CIC33000 | 759551097600 | IC MSP4411/D5 |
| CIC41540 | 759551116300 | IC 74HCT4053 T&R |
| CIC43510 | 759551116300 | IC 74HCT4053 T&R |
| CIC43520 | 759551116300 | IC 74HCT4053 T&R |
| CIC43530 | 759551116300 | IC 74HCT4053 T&R |
| CIC60550 | 830485396100 | SMD IC UCC3961D SO14 TID |
| CIC61530 | 830485358000 | SMD IC UCC3580D-3 SO16 TID |
| CIC61610 | 830598605000 | SMD IC KF50BD-TR SGS AV215- |
| CIC61810 | 759551097500 | IC L 4973D3.3-013TR |
| CL 29549 | 810498231400 | SMD DAEMPF-PERLE 0603 BLM18 |
| CL 29551 | 810498231400 | SMD DAEMPF-PERLE 0603 BLM18 |
| CL 29731 | 810498231400 | SMD DAEMPF-PERLE 0603 BLM18 |
| CL 31005 | 810498231400 | SMD DAEMPF-PERLE 0603 BLM18 |
| CL 31006 | 810498231400 | SMD DAEMPF-PERLE 0603 BLM18 |
| CL 33091 | 810498231400 | SMD DAEMPF-PERLE 0603 BLM18 |
| CL 33092 | 810498231400 | SMD DAEMPF-PERLE 0603 BLM18 |
| CL 60511 | 810498234900 | SMD DAEMPF-PERLE 0805 BLM21 |
| CL 60571 | 810498233100 | SMD DAEMPF-PERLE 0805 BLM21 |
| CL 61531 | 810498233100 | SMD DAEMPF-PERLE 0805 BLM21 |
| CL 61800 | 814054556000 | SMD EMIFIL 1806 BLM41PG600S |
| CL 70513 | 810498234900 | SMD DAEMPF-PERLE 0805 BLM21 |
| CL 72505 | 810498234900 | SMD DAEMPF-PERLE 0805 BLM21 |
| CL 72540 | 810498234900 | SMD DAEMPF-PERLE 0805 BLM21 |
| CL 72544 | 810498234900 | SMD DAEMPF-PERLE 0805 BLM21 |
| CL 72546 | 810498234900 | SMD DAEMPF-PERLE 0805 BLM21 |
| CR 29505 | 759551022100 | WIDERST. 12 KOHM 1/16 W |
| CR 29509 | 759550987600 | WIDERST. 4.7 K 1/16W |
| CR 29519 | 759550987600 | WIDERST. 4.7 K 1/16W |
| CR 29535 | 759551022100 | WIDERST. 12 KOHM 1/16 W |
| CR 29539 | 759550987600 | WIDERST. 4.7 K 1/16W |
| CR 29543 | 759550987600 | WIDERST. 4.7 K 1/16W |
| CR 29600 | 759550987600 | WIDERST. 4.7 K 1/16W |
| CR 29630 | 759550987600 | WIDERST. 4.7 K 1/16W |
| CR 29660 | 759550987600 | WIDERST. 4.7 K 1/16W |
| CR 31003 | 759550987600 | WIDERST. 4.7 K 1/16W |
| CR 31013 | 759550987600 | WIDERST. 4.7 K 1/16W |
| CR 32008 | 759550987600 | WIDERST. 4.7 K 1/16W |
| CR 32015 | 759550987600 | WIDERST. 4.7 K 1/16W |
| CR 32060 | 759550987600 | WIDERST. 4.7 K 1/16W |
| CR 32065 | 759550987600 | WIDERST. 4.7 K 1/16W |
| CR 32086 | 759550987600 | WIDERST. 4.7 K 1/16W |
| CR 33101 | 759550987600 | WIDERST. 4.7 K 1/16W |
| CR 40504 | 759550987600 | WIDERST. 4.7 K 1/16W |

ÄNDERUNGEN VORBEHALTEN / SUBJECT TO ALTERATION

| POS. NR. POS. NO. | MATERIAL-NR. PART NUMBER | BEZEICHNUNG DESCRIPTION |
|---|---|---|
| CR 40553 | 759551022100 | WIDERST. 12 KOHM 1/16 W |
| CR 40554 | 759551022100 | WIDERST. 12 KOHM 1/16 W |
| CR 43574 | 759550987600 | WIDERST. 4.7 K 1/16W |
| CR 43590 | 759550987600 | WIDERST. 4.7 K 1/16W |
| CR 43591 | 759550987600 | WIDERST. 4.7 K 1/16W |
| CR 43594 | 759550987600 | WIDERST. 4.7 K 1/16W |
| CR 60553 | 759551167200 | RC-CHIP 100K %1 1/10W /0805 |
| CR 60559 | 759551167200 | RC-CHIP 100K %1 1/10W /0805 |
| CR 80510 | 759551154900 | WIDERST.15KOHM 1/16W 0603 |
| CR 80513 | 759550987600 | WIDERST. 4.7 K 1/16W |
| CR 90570 | 759550987600 | WIDERST. 4.7 K 1/16W |
| CT 29510 | 759551098200 | TRANS BC847BPDW1T |
| CT 29530 | 759551098200 | TRANS BC847BPDW1T |
| CT 29610 | 759551098100 | TRANS BF799W |
| CT 29615 | 759551098100 | TRANS BF799W |
| CT 29620 | 759880004700 | TRANS.BF 824 |
| CT 29630 | 759551098100 | TRANS BF799W |
| CT 29635 | 759551098100 | TRANS BF799W |
| CT 29640 | 759880004700 | TRANS.BF 824 |
| CT 29660 | 759551098100 | TRANS BF799W |
| CT 29665 | 759551098100 | TRANS BF799W |
| CT 29670 | 759880004700 | TRANS.BF 824 |
| CT 29740 | 759551098200 | TRANS BC847BPDW1T |
| CT 32005 | 830100485700 | SMD TRANS BC857B |
| CT 32064 | 759551098000 | TRANS BF824 |
| CT 32065 | 759551097900 | TRANS BC847BTT1 |
| CT 32070 | 759551097900 | TRANS BC847BTT1 |
| CT 32075 | 759551097900 | TRANS BC847BTT1 |
| CT 32086 | 759551098000 | TRANS BF824 |
| CT 41506 | 830100581800 | SMD TRANS BC818-25/ BC817-2 |
| CT 41507 | 830100581800 | SMD TRANS BC818-25/ BC817-2 |
| CT 43571 | 759551098700 | TRANS BC848BLT1G |
| CT 43589 | 759551098700 | TRANS BC848BLT1G |
| CT 43620 | 759551098300 | TRANS BC847BDW1T1 |
| CT 43625 | 830100485700 | SMD TRANS BC857B |
| CT 43640 | 759551098300 | TRANS BC847BDW1T1 |
| CT 43645 | 830100485700 | SMD TRANS BC857B |
| CT 43660 | 759551098300 | TRANS BC847BDW1T1 |
| CT 43665 | 830100485700 | SMD TRANS BC857B |
| CT 43680 | 759551098300 | TRANS BC847BDW1T1 |
| CT 60302 | 759551098700 | TRANS BC848BLT1G |
| CT 60511 | 759551097800 | TRANS BC858CLT1 |
| CT 61501 | 759551098700 | TRANS BC848BLT1G |
| CT 61502 | 759551098700 | TRANS BC848BLT1G |
| CT 61821 | 759551098700 | TRANS BC848BLT1G |
| CT 80205 | 759551098000 | TRANS BF824 |
| CT 80206 | 759551098000 | TRANS BF824 |
| CT 80505 | 759551098300 | TRANS BC847BDW1T1 |
| CT 80551 | 759551097900 | TRANS BC847BTT1 |
| CT 80552 | 759551098300 | TRANS BC847BDW1T1 |
| CT 84003 | 759551098000 | TRANS BF824 |
| CT 84004 | 759551098000 | TRANS BF824 |
| CT 84026 | 759551097900 | TRANS BC847BTT1 |
| D 60501 | 759551130100 | DIODE FBI2L-5S2 |
| D 60516 | 830920002100 | DIODE BAV21 ITT/ TFK AV619 |
| D 60579 | 830951685400 | DIODE BYT 54 M GEG.N.AV 619 |
| D 60581 | 830920401500 | DIODE BY203S-20 TFK AV619 - |
| D 60586 | 830920002100 | DIODE BAV21 ITT/ TFK AV619 |
| D 60587 | 830920002100 | DIODE BAV21 ITT/ TFK AV619 |
| D 60588 | 759550577400 | Z-DIODE BZX55-C13V |
| D 61411 | 830919420300 | DIODE STTH2003CT TO220AB S |
| D 61511 | 830919420300 | DIODE STTH2003CT TO220AB S |
| D 61522 | 830919420300 | DIODE STTH2003CT TO220AB S |
| D 61531 | 759550577400 | Z-DIODE BZX55-C13V |
| D 61531 | 759550577400 | Z-DIODE BZX55-C13V |
| D 61601 | 830919816000 | DIODE STPS1L60 STM |

| POS. NR. POS. NO. | MATERIAL-NR. PART NUMBER | BEZEICHNUNG DESCRIPTION |
|---|---|---|
| D 61604 | 830920002100 | DIODE BAV21 ITT/ TFK AV619 |
| D 61801 | 830919812500 | DIODE STPS10L25D STM |
| D 61803 | 830920002100 | DIODE BAV21 ITT/ TFK AV619 |
| F 32023 | 759550921100 | FILTER OFW K9656M |
| F 32024 | 831900395300 | OFWFIL K3953M |
| IC 33010 | 759551116100 | IC MC33164P-5RP |
| IC 33080 | 830544007400 | IC TL074ACN TID |
| IC 40801 | 830533738100 | IC TDA7381 |
| IC 41530 | 830521007800 | IC MC33078P MOT |
| IC 43570 | 759880683000 | IC VIDEO SCHALTER TEA6425 |
| IC 60511 | 759551019600 | IC TNY264P |
| IC 61604 | 830546543100 | IC TS431IZ-AP STM |
| IC 61830 | 830520497800 | IC L4978 STM |
| IC 61841 | 759551138900 | IC LM317TG T0220 |
| IC 61900 | 830520497800 | IC L4978 STM |
| L 32051 | 759550660400 | SPULE 10 UH |
| L 60585 | 759875814200 | CHIP SPULE 1.2 UH |
| L 61511 | 759551101900 | SPULE 59 UH |
| L 61518 | 759880601600 | SPULE 1.1UH |
| L 61520 | 759880601600 | SPULE 1.1UH |
| L 61601 | 759550624400 | SPULE 10 UH |
| L 61801 | 759551101800 | SPULE 24 UH |
| L 61807 | 759880601600 | SPULE 1.1UH |
| L 61811 | 759880601600 | SPULE 1.1UH |
| L 61825 | 759880601600 | SPULE 1.1UH |
| L 61831 | 759880601600 | SPULE 1.1UH |
| L 61833 | 814052105800 | SPEICHER-DR 59UH 2,5A EF16/ |
| L 61900 | 759880601600 | SPULE 1.1UH |
| L 61902 | 759551176100 | SPULE 100 UH 6P |
| L 61904 | 759880601600 | SPULE 1.1UH |
| L 61906 | 759550660400 | SPULE 10 UH |
| OK60511 ⚠ | 759551100500 | IC SFH615A-2 OPTOKOPPLER |
| OK60590 ⚠ | 759551100500 | IC SFH615A-2 OPTOKOPPLER |
| Q 32034 | 759550143600 | CER RESONATOR 4MHZ |
| Q 33046 | 759550967400 | QUARZ 18.432MHZ +-30PPM |
| R 40525 | 759551176000 | WIDERST. 0.27 OHM 5 W |
| R 60590 ⚠ | 759550452600 | WIDERST 4,7MOHM1/2W |
| R 62501 ⚠ | 831100059000 | NTC 4,7 OHM 10% 642 12478/T |
| R 62502 | 759551176200 | ESTR. S14K275E2 |
| R 62503 ⚠ | 759550452600 | WIDERST 4,7MOHM1/2W |
| S 62501 ⚠ | 759550450300 | NETZSCHALTER |
| SI 40521 ⚠ | 759550922700 | SICHERUNG 3.15AT |
| SI 60511 ⚠ | 759535053300 | SICHERUNG 100MA 250V |
| SI 60521 ⚠ | 759836610000 | SICHERUNG T2A/250V QFS-C202 |
| SI 62501 ⚠ | 759880545400 | SICHERUNG 2.5AH 250V |
| T 60540 | 759550951300 | TRANS TRN STP4NK60ZFP |
| T 60579 | 830299708000 | TRANS SPP06N60C3 DRAIN GEKR |
| T 60585 | 830220163700 | TRANS.BC 637 SIE/VAL |
| T 61524 | 830328463800 | TRANS BC638-16 <<< AV330 -A |
| T 61524 | 830328463800 | TRANS BC638-16 <<< AV330 -A |
| T 61530 | 830220163700 | TRANS.BC 637 SIE/VAL |
| TR 60501 ⚠ | 759551100200 | TRAFO SMT EL/60010020A 26/3 |
| TR 60510 ⚠ | 759551101000 | TRAFO STANBY 4 W |
| TR 60520 ⚠ | 759551100300 | TRAFO PULSE 2 W |
| TU 32000 | 759551052100 | TUNER PH UV1316T/SIGH-3 SPL |

Es gelten die Vorschriften und Sicherheitshinweise gemäß dem Service Manual "Sicherheit", Mat.-Nummer 720108000001, sowie zusätzlich die eventuell abweichenden, landesspezifischen Vorschriften!

⚠ (!)

The regulations and safety instructions shall be valid as provided by the "Safety" Service Manual, part number 720108000001, as well as the respective national deviations.

ÄNDERUNGEN VORBEHALTEN / SUBJECT TO ALTERATION

GRUNDIG

# TV Service Manual

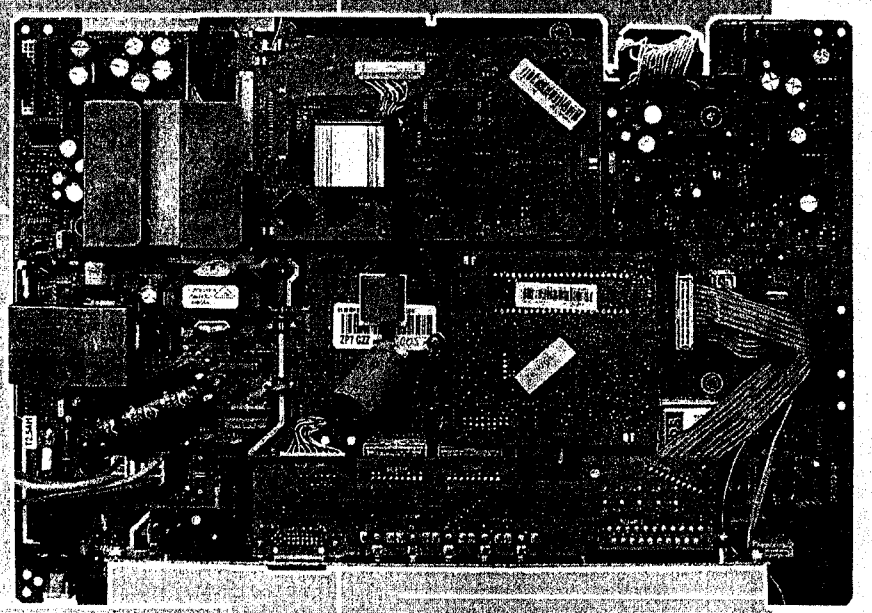

## Chassis G1

**Tharus 26**
**LW 68-9510 Dolby**
GBA5300

**Tharus 30**
**LW 76-9510 Dolby**
GBB1700

NUR FÜR INTERNEN GEBRAUCH
FOR INTERNAL USE ONLY

Zusätzlich erforderliche Unterlagen für den Komplettservice
Additionally required Service Documents for the Complete Service

| Service Manual<br>Sicherheit<br>Safety<br>Materialnr./Part No.<br>720108000001 |
|---|

Materialnummer / Part Number 720100516000
Änderungen vorbehalten / Subject to alteration
H-S41 • 0405
http://www.grundig.com

Es gelten die Vorschriften und Sicherheitshinweise gemäß dem Service Manual "Sicherheit", Materialnummer 720108000001, sowie zusätzlich die eventuell abweichenden, landesspezifischen Vorschriften!

The regulations and safety instructions shall be valid as provided by the "Safety" Service Manual, part number 720108000001, as well as the respective national deviations.

## Inhaltsverzeichnis


Seite

**Allgemeiner Teil ..... 1-2...1-10**
Allgemeine Hinweise ..... 1-2
Technische Daten ..... 1-3
Bedienhinweise ..... 1-4
Service- und Sonderfunktionen ..... 1-7

**Abgleich ..... 2-1**

**Platinenabbildungen und Schaltpläne ..... 3-1...3-46**
Buchsen-Platte ..... 3-1
Chassisplatte / NF-Platte ..... 3-2
– Netzteil ..... 3-14
– Signalverarbeitung ..... 3-17
– NF-Platte ..... 3-20
– IN/OUT ..... 3-21
– VGA ..... 3-24
– Scaler-Interface ..... 3-25
PFC-Platte ..... 3-26
AV-Platte ..... 3-26
IR/BA-Platte ..... 3-26
Scaler-Platte ..... 3-28
– Eingang ..... 3-31
– VPC-Konverter ..... 3-33
– DVI & RGB Konverter ..... 3-34
– Scaler-Display-Interface ..... 3-35
– Scaler-Steuerung ..... 3-36
– Speicher ..... 3-37
– Netzteil ..... 3-37
M2-Platte ..... 3-38
Oszillogramme ..... 3-44
IC-Blockschaltpläne ..... 3-46

**Ersatzteillisten ..... 4-1...4-6**


## Table of Contents


Page

**General Section ..... 1-2...1-10**
General Notes ..... 1-2
Technical Data ..... 1-3
Operating Hints ..... 1-5
Service and Special Functions ..... 1-9

**Alignment ..... 2-2**

**Layout of the PCBs and Circuit Diagrams ..... 3-1...3-46**
Socket Board ..... 3-1
Chassis Board / AF Board ..... 3-2
– Power Supply ..... 3-14
– Signal Processing ..... 3-17
– AF Board ..... 3-20
– IN/OUT ..... 3-21
– VGA ..... 3-24
– Scaler Interface ..... 3-25
PCB Board ..... 3-26
AV Board ..... 3-26
IR/BA Board ..... 3-26
Scaler Board ..... 3-28
– Input ..... 3-31
– VPC Converter ..... 3-33
– DVI & RGB Converter ..... 3-34
– Scaler Display Interface ..... 3-35
– Scaler Control ..... 3-36
– Memory ..... 3-37
– Power Supply ..... 3-37
M2 Board ..... 3-38
Oscillograms ..... 3-44
IC Block Circuit Diagrams ..... 3-46

**Spare Parts Lists ..... 4-1...4-6**


# Allgemeiner Teil

## Allgemeine Hinweise

**Vor dem Öffnen des Gehäuses den Netzstecker ziehen!**

**Achtung: ESD-Vorschriften beachten**

**Leitungsverlegung**
Bevor Sie die Leitungen und insbesondere die Masseleitungen lösen, muss die Leitungsverlegung zu den einzelnen Baugruppen beachtet werden.
Nach erfolgter Reparatur ist es notwendig, die Leitungsführung wieder in den werkseitigen Zustand zu versetzen um evtl. spätere Ausfälle oder Störungen zu vermeiden.

**Durchführen von Messungen**
Bei Messungen mit dem Oszilloskop an Halbleitern sollten Sie nur Tastköpfe mit 10:1 - Teiler verwenden. Außerdem ist zu beachten, dass nach vorheriger Messung mit AC-Kopplung der Koppelkondensator des Oszilloskops aufgeladen sein kann. Durch die Entladung über das Messobjekt können Bauteile beschädigt werden.

**Messwerte und Oszillogramme**
Bei den in den Schaltplänen und Oszillogrammen angegebenen Messwerten handelt es sich um Näherungswerte!

# General Section

## General Notes

**Before opening the cabinet disconnect the mains plug!**

**Attention: Observe the ESD safety regulations**

**Wiring**
Before disconnecting any leads and especially the earth connecting leads observe the way they are routed to the individual assemblies. On completion of the repairs the leads must be laid out as originally fitted at the factory to avoid later failures or disturbances.

**Carrying out Measurements**
When making measurements on semi-conductors with an oscilloscope, ensure that the test probe is set to 10:1 dividing factor. If the previous measurement was made on AC input, please note that the coupling capacitor in the oscilloscope will be charged. Discharge via the item being checked can damage the components.

**Measured Values and Oscillograms**
The measured values given in the circuit diagrams and oscillograms are approximates!

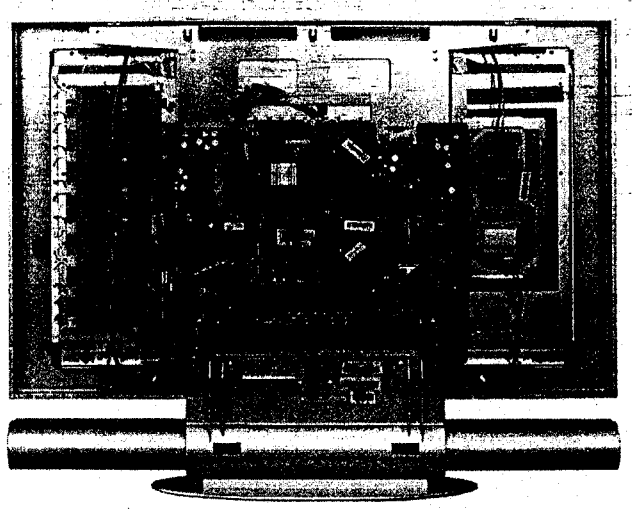

## Technische Daten / Technical Data

| | Tharus 26 LW 68-9510 Dolby (YN7) | Tharus 30 LW 76-9510 Dolby (YN6) |
|---|---|---|
| **TFT LCD Panel** | | |
| Sichtbares Bild<br>Visible picture | 66cm | 76cm |
| Bildschirmdiagonale<br>Screen diagonal | 66cm (26") | 76cm (30") |
| Maximale Auflösung<br>Resolution max. | 1280 x 768 Pixel | |
| Kontrastverhältnis<br>Contrast ratio | 600:1 | |
| Leuchtdichte<br>Brightness | 500cd/m$^2$ | 600cd/m$^2$ |
| Betrachtungswinkel<br>Viewing angel | 170° horizontal, 170° vertikal<br>170° horizontal, 170° vertical | |
| Display-Trägheit<br>Response time | 16ms (typ.) | |
| **Elektronik / Electronic** | | |
| Programme | 99 + 7AV | |
| Tuner | 1 terr. PLL Frequenz Synthesizer Tuning, global Pinning | |
| TV-Normen<br>TV-Standards | PAL, SECAM,<br>über/via AV NTSC 3.58/4.43MHz, NTSC M<br>B/G, L/L', I, D/K/K', M, N | |
| Stereo Systeme<br>Stereo systems | German A2 (B/G/D/K)<br>Nicam 5.85MHz (BG, L) + 6.52MHz (I) | |
| Videotext / Teletext | 2000-Seiten / pages | |
| Musikleistung<br>Music power | Front 2 x 10W (2 x 6W Sinus)<br>Subwoofer 20W (10 W Sinus) | |
| **Anschlüsse Rückwand / Connections Rear Panel** | | |
| Euro AV 1 | FBAS Ein-/Ausgang, RGB Eingang, SBAS Eingang, Audio Ein-/Ausgang<br>CCVS in-/output, RGB input, SCVS input, Audio in-/output | |
| Euro AV 2 | FBAS Ein-/Ausgang, RGB Eingang, Audio Ein-/Ausgang<br>CCVS in-/output, RGB input, Audio in-/output | |
| Wireless AV | FBAS Eingang, Audio Eingang<br>CCVS input, Audio input | |
| Progressive Scan Eingang / input | 5x Cinch Buchsen für Y, Pb, Pr, L, R<br>5x Cinch sockets for Y, Pb, Pr, L, R | |
| Cinch-AV-Buchse Eingang<br>Cinch-AV socket input | FBAS Eingang, 2x Audio Stereoeingang<br>CCVS input, 2x audio stereo input | |
| S-Videoeingangsbuchse<br>S-Video input socket | 4-polige Hosidenbuchse<br>4-pin mini-Din | |
| LINE/Kopfhörer-Buchse Ausgang<br>LINE/Headphone socket output | Stereoklinkenbuchse (3,5mm)<br>Stereo minijack (3.5mm) | |
| PC: VGA & DVI | Bildschirmauflösung / Screen resolution WXGA 1280 x 768 Pixel | |
| PC: Audio-Eingang / input | Stereoklinkenbuchse (3,5mm) / Stereo minijack (3.5mm) | |
| Service-Buchse / Socket | für F-Prog 1 (ab Version 2.0) oder Service Toolbox<br>for F-Prog 1 (from version 2.0) or Service Toolbox | |
| **Netzteil / Mains Stage** | | |
| Netzspannung (Regelbereich)<br>Mains voltage (variable) | 190...264V AC | |
| Netzfrequenz<br>Mains frequency | 50 / 60Hz | |
| Leistungsaufnahme<br>Power consumption | ca. 150W | ca. 130W |
| Standby | ca. 1W | |

## Bedienhinweise

Dieses Kapitel enthält Auszüge aus der Bedienungsanleitung.

Weitergehende Informationen entnehmen Sie bitte der gerätespezifischen Bedienungsanleitung, deren Materialnummer Sie in der entsprechenden Ersatzteilliste finden.

# AUF EINEN BLICK

### Die Anschlüsse des Fernsehgerätes

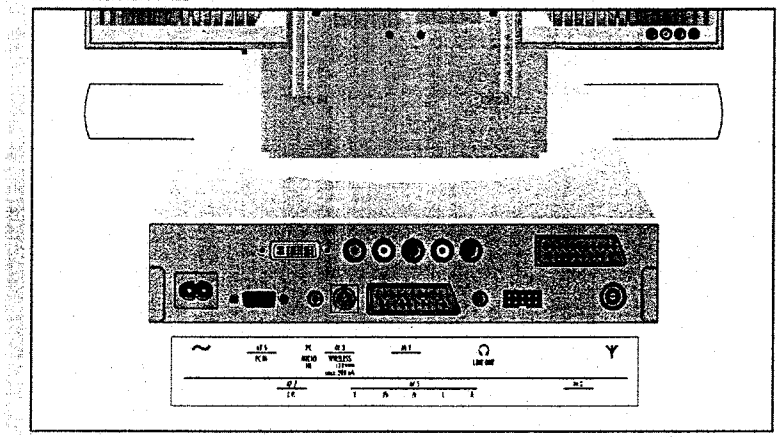

| | |
|---|---|
| ~ | Netzbuchse. |
| AV 6 PC IN | VGA Anschluss für PC. |
| PC AUDIO IN | Tonsignal-Eingang für PC. |
| AV 3 WIRELESS | AV-Buchse, zum Anschluss von Videorecorder, DVD-Player, Satellitenreceiver oder Camera-Recorder über den beiliegenden AV-Adapter oder das kabellose Übertragungsmodul WT-AV. |
| AV 1 | Euro/AV-Buchse für DVD-Player, Videorecorder, Satellitenreceiver. |
| LINE OUT | Kopfhörerbuchse/Tonsignal-Ausgang. |
| | Servicebuchse für den Fachhändler. |
| Y | Antennenbuchse. |
| AV 7 DVI | Bildsignal-Eingang nach DVI-Standard, für digitale (DVI) oder analoge (RGB) Signale vom PC. |
| AV 5 Y Pb Pr | Bildsignal-Eingang für DVD-Player, Videorecorder, Satellitenreceiver (YUV-Standard). |
| L R | Tonsignal-Eingang für DVD-Player, Videorecorder, Satellitenreceiver. |
| AV 2 | Euro/AV-Buchse für DVD-Player, Videorecorder, Satellitenreceiver. |



# AUF EINEN BLICK

### Die Fernbedienung (Fernsehbetrieb)

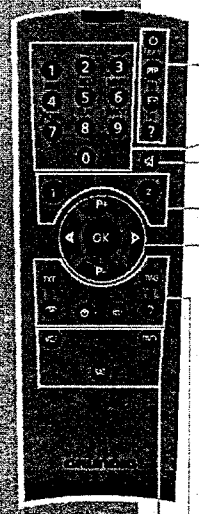

| | |
|---|---|
| ⏻ | Schaltet das Fernsehgerät aus (Stand-by) und ein. |
| PIP | Fernsehbild im Videotext. |
| | Schaltet das Bildformat um. |
| ? | Ruft das Stichwortverzeichnis A-Z auf. |
| 1...0 | Schalten das Fernsehgerät aus Stand-by ein; wählen Fernseh-Programme direkt. »0« wählt die AV-Programmplätze »AV 1«, »AV 2« und »AV 3«; alphanumerische Programmwahl (siehe Seite 12); Eingabe der Videotext-Seitennummern. |
| | Ton aus/ein (stummschalten). |
| i | Ruft das Menü »Easy Dialog« auf. |
| Z | Zapp-Funktion (siehe Seite 12). |
| P+, P- | Schalten das Fernsehgerät aus Stand-by ein; wählen Programme schrittweise; bewegen Cursor nach oben/unten. |
| ◀ ▶ | Ändern die Lautstärke; bewegen Cursor nach links/rechts. |
| OK | Aktiviert verschiedene Funktionen. |
| TXT | Schaltet um zwischen Videotext-Betrieb und TV-Betrieb. |
| TV-G | Ruft den TV-Guide auf; Blendet Infos über aktuelle Sendungen ein. |
| | Ruft das Menü »Bild« auf. |
| | Blendet Uhrzeit und Programmplatzinformation ein/aus. |
| | Standbild. |
| | Ruft das Menü »Ton« auf. |
| VCR DVD SAT | Zur Bedienung der Grundfunktionen eines GRUNDIG Videorecorders, Satellitenreceivers oder DVD-Players. Taste **»VCR«**, **»SAT«** bzw. **»DVD«** drücken und gedrückt halten. Anschließend gewünschte Taste drücken. Welche Funktionen Sie ausführen können, hängt von der Ausstattung des Gerätes ab. Probieren Sie es einfach aus. |

# AUF EINEN BLICK

## Die Fernbedienung (Videotextbetrieb)

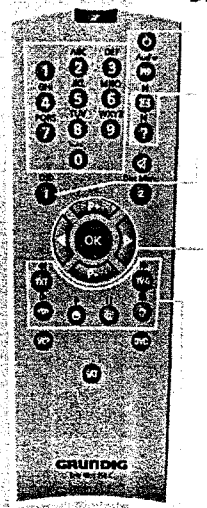

| | |
|---|---|
| 1 ... 0 | Eingabe der Videotext-Seitennummern. |
| | Schaltet auf doppelte Zeichengröße. |
| ? | Ruft Erklärungen zu den Funktionen des Videotextes im Menü »VT-Einstellungen« auf. |
| i | Ruft das Menü »VT-Einstellungen« auf. |
| P+, P- | Page Catching. |
| | Videotextseiten aus Übersichtseiten direkt wählen und mit »**OK**« aufrufen. |
| ◀ ▶ | Wählen Unterseiten an. |
| | Dazu Funktion »Unterseiten« im Menü »VT-Einstellungen« auf »ein« einstellen. |
| OK | Aktiviert die Funktionen »Stopp«, »Aktuellbetrieb« oder »Antwortfreigabe« (wenn die entsprechende Funktion im Menü »VT-Einstellungen« eingeschaltet ist). |
| TXT | Schaltet um zwischen Videotext-Betrieb und TV-Betrieb. |
| TV-G | Wählt die Funktion »Aktuellbetrieb«. |
| (rot) | Blättert eine Seite zurück. |
| (grün) | Blättert zur nächsten Seite. |
| @ (gelb) | Wählt nächstes Kapitel. |
| (blau) | Wählt nächstes Thema. |

**Hinweise:**
Im Menü »VT-Einstellungen« können vielfältige Möglichkeiten des Videotextes eingestellt werden. Rufen Sie dazu während des Videotext-Betriebes das Menü »VT-Einstellungen« mit »i« auf.
Detaillierte Hinweise dazu finden Sie in der interaktiven Bedienungsanleitung » Easy Dialog System «.

## Die Bedienelemente des Fernsehgerätes

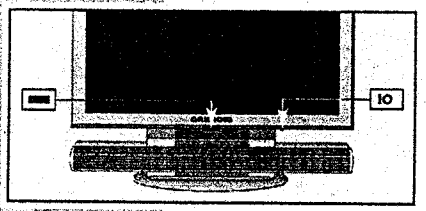


IO Schaltet das Fernsehgerät ein/aus.

Betriebsanzeige.
**Grün** = Betrieb;
**Orange** = Stand-by (TV-Guide-, Copy-, Timer-Betrieb);
**Rot** = Stand-by (Energiesparbetrieb, Timer programmiert).





# Operating Hints

This chapter contains excerpts from the operating instructions.

For further particulars please refer to the appropriate user instructions the part number of which is indicated in the relevant spare parts list.

# OVERVIEW

## Connections on the television

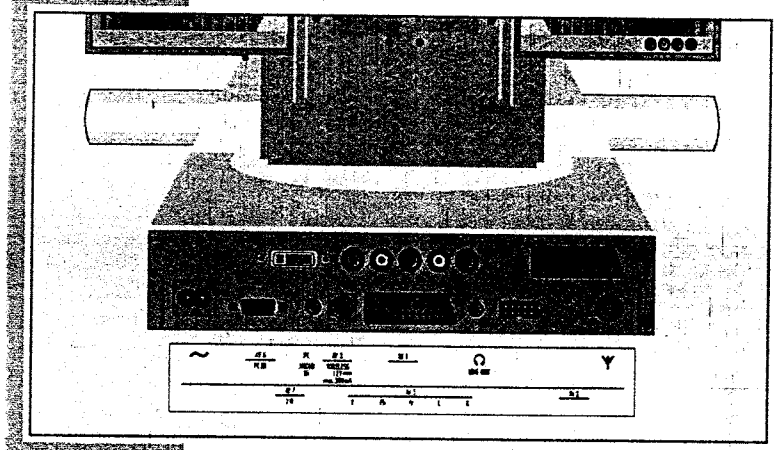

| | |
|---|---|
| ~ | Mains socket. |
| AV 6 PC IN | VGA connection for PC. |
| PC AUDIO IN | Audio signal input PC. |
| AV 3 WIRELESS | AV socket, for connecting a video recorder, DVD player, satellite receiver or camcorder using the AV adapter supplied or the WT-AV wireless transmission module. |
| AV 1 | Euro/AV socket for a DVD player, video recorder or satellite receiver. |
| LINE OUT Ω | Headphone socket/audio output. |
| | Service socket for dealers. |
| Y | Antenna socket. |
| AV 7 DVI | DVI-standard video input socket for digital (DVI) or analogue (RGB) signals from a PC. |
| AV 5 Y Pb Pr | Video input sockets for a DVD player, video recorder or satellite receiver (YUV standard). |
| L R | Audio input for DVD player, video recorder or satellite receiver. |
| AV 2 | Euro/AV socket for a DVD player, video recorder or satellite receiver. |

# OVERVIEW

## The remote control (TV mode)

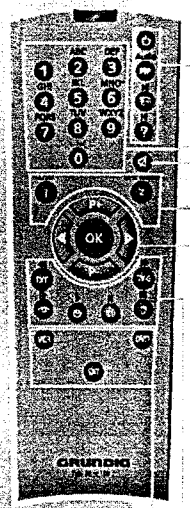

| | |
|---|---|
| ⏻ | Switches the television off (standby) and on. |
| PIP | TV picture in teletext. |
| ⊡ | Switches between picture formats. |
| ? | Calls up the A–Z index. |
| 1 ... 0 | Switch the television on from standby.<br>Select TV stations directly.<br>»0« Selects AV channels »AV 1«, »AV 2« and »AV 3«.<br>Alphanumerical station selection (see page 12).<br>Enter teletext page numbers. |
| 🔇 | Sound on/off (mute). |
| i | Opens the »Easy Dialog« menu. |
| Z | Zap function (see page 12). |
| P+, P- | Switch the television on from standby.<br>Select stations step-by-step.<br>Move cursor up/down. |
| ◀ ▶ | Adjust the volume.<br>Move the cursor left/right. |
| OK | Activates various functions. |
| TXT | Switches between teletext and TV modes. |
| TV-G | Opens the TV Guide.<br>Shows information on current programmes. |
| 👁 | Opens the »Picture« menu. |
| ⏲ | Shows/hides the time and station information. |
| ▯▯ | Freeze-frame. |
| ♪ | Opens the »Sound« menu. |
| VCR DVD SAT | For using the basic functions of a GRUNDIG video recorder, satellite receiver or DVD player.<br>Press and hold down the »**VCR**«, »**SAT**« or »**DVD**« button. Then press the appropriate button.<br>The functions available depend on the model of the device you are using. Just try it out. |





# OVERVIEW

## The remote control (teletext mode)

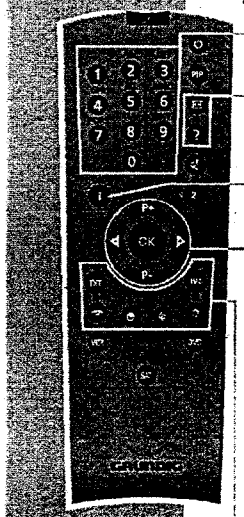

| | |
|---|---|
| 1 ... 0 | Enter teletext page numbers. |
| ⊡ | Switches to double character height. |
| ? | Shows information on the videotext functions on the »VT settings« menu. |
| i | Opens the »VT settings« menu. |
| P+, P- | Page catching. |
| | Select teletext pages directly from the main pages and open them with »**OK**«. |
| ◀ ▶ | Select subpages. |
| | To do this, set the »Subpages« function in the »VT settings« menu to »On«. |
| OK | Activates the »Stop«, »Present mode« or »Press reveal« function (if that function is enabled in the »VT settings« menu). |
| TXT | Switches between teletext and TV modes. |
| TV-G | Selects the »Present mode« function. |
| 👁 (red) | Scrolls back a page. |
| ⏲ (green) | Scrolls to the next page. |
| @ (yellow) | Selects the next chapter. |
| ? (Blue) | Selects the next topic. |

**Notes:**
In the »VT settings« menu you can select numerous teletext settings. In teletext mode, open the »VT settings« menu by pressing »i«.
You can find more detailed instructions in the interactive »Easy Dialog System« operating manual.

## Operating controls on the television

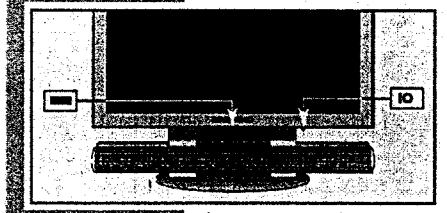

**IO** Switches the TV set on/off.

▬ Operation indicator
**Green** = Operation;
**Yellow** = Standby (TV-GUIDE mode, copy mode, Timer mode);
**Red** = Standby (power saving mode, timer programmed)

# Service- und Sonderfunktionen

| | |
|---|---|
| Aufruf des Service-Menüs: | Taste " i " (EASY DIALOG) |
| Aufruf der Dialogzeile: | Tasten "P+" / "P-" –> "OK" |
| Einstellung in der Dialogzeile ändern: | Tasten " ◄ " / " ► " –> "OK" |
| Zurück ins vorherige Menü: | "blaue" Taste |
| Beenden des Menüs: | Taste " i " |
| Servicemenü für Händler (Codezahl): | "8500" |

## 1. Einschaltfunktionen

### 1.1 ATS-Reset
Netzschalter "EIN" mit gedrückter Fernbedientaste " ► ".
- Gerät wird mit Analog-Grundwerten geladen.
- ATS-Bit wird gesetzt. Diese Option löst beim nächsten Einschalten das ATS euro plus aus. Die bisherige Programmbelegung (Senderkanäle) wird gelöscht.

### 1.2 Programmsperre (Kindersicherung)
Die Tastenfolge "7 0 3 8 5 8 0" hebt die persönliche Kennzahl auf.

### 1.3 Software-Versionsnummer
Das Menü "EASY DIALOG" aufrufen. Durch Betätigen der "grünen" Taste wird die Software-Versionsnummer angezeigt.

### 1.4 Flashprogrammierung
**Benötigtes Equipment**
Flash-Programmer F-Prog 1 / ab Version 2.0 oder
Service Toolbox Materialnummer 772004001200.

**Erforderliche Hardware (Minimum)**
Pentium-PC, Microsoft Windows 95
- freier Arbeitsspeicher 32MB
- CD-ROM-Laufwerk
- serielle Schnittstelle
- Internet-Zugang

### 1.5 Direkte Display-Typ-Einstellung
Ist die Menüdarstellung auf Grund falscher Display-Typ-Einstellung nicht mehr möglich, können Sie mit "Short-cuts" die korrekte Einstellung vornehmen.
Vor und nach der Direkteingabe muss das Gerät aus- und wieder eingeschaltet werden!
Mit den Tasten " i ", "rot" und Ziffer den gewünschten Display-Typ gemäß Display-Label einstellen.
Folgende Ziffern sind den jeweiligen Display-Typen zugeordnet:

1 SAM LTA260W2
2 AUO T260XW01
3 LPL LC260W01
4 CMO V270W1
5 CMO V296W1
6 AUO T296XW01
7 LPL LC300W01
8 LPL LC230W01

## 2. Sonderfunktionen im Menü "Installation"

### 2.1 Buchstaben-Eingabe
Das Menü "Buchstaben-Eingabe" über "EASY DIALOG" –> "Installation" –> "Sonderfunktionen" aufrufen.
Sie können die Buchstaben-Eingabe für die Programmwahl zwischen "aus", "ein" und "mix" wählen.

### 2.2 "Tonskala" sichtbar oder unsichtbar für alle Programme
Das Menü "Tonskala" über "EASY DIALOG" –> "Installation" –> "Sonderfunktionen" aufrufen.
Bei "aus" erscheint keine Balkenanzeige für die Lautstärke.

### 2.3 Einschalten mit Programm "1" oder "automatisch"
Das Menü "Einschalten" über "EASY DIALOG" –> "Installation" –> "Sonderfunktionen" aufrufen.
Auf "Programmplatz 1" oder "automatisch" stellen.
Bei "automatisch" wird der beim Ausschalten eingestellte Programmplatz beim Einschalten wieder aufgerufen (Last station memory).

### 2.4 "Megalogic Info" (nur wenn Megalogic-Gerät erkannt wurde)
Das Menü "Megalogic Info" über "EASY DIALOG" –> "Installation" –> "Sonderfunktionen" aufrufen.
Die Megalogic-Steuerung kann auf "ein" bzw. "aus" geschaltet werden.

### 2.5 Statusanzeige
Das Menü "Statusanzeige" über "EASY DIALOG" –> "Installation" –> "Sonderfunktionen" aufrufen.
Sie können wählen an welcher Position ("oben" oder "unten") die Information über Tonart und Bildformat eingeblendet wird.
Bei "aus" wird nach Progammwechsel keine Information eingeblendet.

### 2.6 Automatische Lautstärke
Das Menü "Autom. Lautstärke" über "EASY DIALOG" –> "Installation" –> "Sonderfunktionen" aufrufen.
In Stellung "ein" regelt der Ton-IC bei erhöhter Senderlautstärke (z. B. erhöhter HUB bei der Werbung) die Lautstärke intern auf den normalen Wert zurück.

### 2.7 Rauschreduktion P1-P...
Das Menü "Rauschreduktion P1-P..." über "EASY DIALOG" –> "Installation" –> "Sonderfunktionen" aufrufen. Sie können die Rauschreduktion für die **Programme 1-P...** auf "aus", "gering" oder "automatisch" stellen.

### 2.8 Bildschärfe P1-P...
Das Menü "Bildschärfe P1-P..." über "EASY DIALOG" –> "Installation" –> "Sonderfunktionen" aufrufen.
Die Bildschärfe wird für alle Programme eingestellt.

### 2.9 Farbdeckung
Das Menü "Farbdeckung" über "EASY DIALOG" –> "Installation" –> "Sonderfunktionen" –> Seite 2 aufrufen.
Die Farbdeckung (Luma-Delay) wird programmplatzbezogen eingestellt.

### 2.10 Bildformat Automatik
Das Menü "Bildformat Automatik" über "EASY DIALOG" –> "Installation" –> "Sonderfunktionen" –> Seite 2 aufrufen.
Sie können wählen, welches Bildformat (4:3, 14:9 Zoom oder Panorama Zoom) bei Sendungen ohne "Letterbox" und ohne übertragener WSS-Info (Wide Screen Signalling) bei aktivierter Bildformat-Automatik dargestellt wird.

## 3. Service-Einstellungen für den Fachhandel

### 3.1 Bildeinstellungen

#### 3.1.1 Weißabgleich
Das Menü "Weißabgleich" über "EASY DIALOG" –> "Installation" –> "Servicemenü für Händler" –> "8500" –> "Bildeinstellungen" aufrufen.
Den Wert für "rot", "grün" und "blau" so einstellen, dass es weiß ergibt (siehe Abgleich Punkt 5).

#### 3.1.2 Blauen Bildschirmhintergrund ein/ausschalten
Das Menü "Blauer Bildschirm" über "EASY DIALOG" –> "Installation" –> "Servicemenü für Händler" –> "8500" –> "Bildeinstellungen" aufrufen.
Auf "ein" oder "aus" stellen.

### 3.2 Hardware-Ausstattung

#### 3.2.1 Displaytyp
Das Menü "Displaytyp" über "EASY DIALOG" –> "Installation" –> "Servicemenü für Händler" –> Kennzahl "8500" –> "Hardware-Ausstattung" aufrufen.
Displaytyp gemäß Typenschild des Displays einstellen.

#### 3.2.2 Tuner-Typ
Das Menü "Terr. Tuner" über "EASY DIALOG" –> "Installation" –> "Servicemenü für Händler" –> Kennzahl "8500" –> "Hardware-Ausstattung" aufrufen.
Auf im Gerät eingebauten Tuner-Typ einstellen.





#### 3.2.3 Fernbedienung
Das Menü "Fernbedienung" über "EASY DIALOG" –> "Installation" –> "Servicemenü für Händler" –> Kennzahl "8500" –> "Hardware-Ausstattung" aufrufen.
Auf "TP100/TP110", "TP150", "TP140" oder "PR11" einstellen.

#### 3.2.4 Front-S-VHS-Buchse
Das Menü "Front-S-VHS-Buchse" über "EASY DIALOG" –> "Installation" –> "Servicemenü für Händler" –> Kennzahl "8500" –> "Hardware-Ausstattung" aufrufen.
Auf "ja" oder "nein" stellen.

#### 3.2.5 Subwoofer
Das Menü "Subwoofer" über "EASY DIALOG" –> "Installation" –> "Servicemenü für Händler" –> Kennzahl "8500" –> "Hardware-Ausstattung" aufrufen.
Auf "ja" oder "nein" stellen.

#### 3.2.6 Front-LED
Das Menü "Front-LED" über "EASY DIALOG" –> "Installation" –> "Servicemenü für Händler" –> Kennzahl "8500" –> "Hardware-Ausstattung" aufrufen.
Auf "3 Colors" oder "1 Color" stellen.

### 3.3 Sonderfunktionen

#### 3.3.1 Watchdog
Das Menü "Watchdog" über "EASY DIALOG" –> "Installation" –> "Servicemenü für Händler" –> "8500" –> "Sonderfunktionen" aufrufen.
Wird der Watchdogtimer nicht in regelmäßigen Zeitabständen zurückgesetzt, wird ein Neustart ausgelöst.
Watchdog auf "aus" oder "ein" schalten.

#### 3.3.2 IR-Dataprogrammer
Das Menü "IR-Dataprogrammer" über "EASY DIALOG" –> "Installation" –> "Servicemenü für Händler" –> "8500" –> "Sonderfunktionen" aufrufen.
Mit der Taste "OK" können mit dem IR-Dataprogrammer 2 max. 99 Programmplätze mit Daten für Kanal, Norm, Peri, 6-stellige Sendereinblendung, Finetuning-Mitte und Lautstärke-Offset "0" abgespeichert werden.

#### 3.3.3 AGC-Einstellung
Das Menü "AGC-Einstellung" über "EASY DIALOG" –> "Installation" –> "Servicemenü für Händler" –> Kennzahl "8500" –> "Sonderfunktionen" aufrufen.
Wert so einstellen, dass das Bild gerade rauschfrei ist (siehe Abgleich Punkt 3).

#### 3.3.4 TV-Guide-Flash löschen
Das Menü "TV-Guide-Flash löschen" über "EASY DIALOG" –> "Installation" –> "Servicemenü für Händler" –> Kennzahl "8500" –> "Sonderfunktionen" aufrufen.
Nach Drücken der Taste "OK" wird das TV-Guide-Flash in einen definierten Zustand versetzt. Ungültige und fehlerhafte Werte werden zurückgesetzt.

#### 3.3.5 Videotext-Level-2.5-Unterstützung
Das Menü "Videotext Level 2.5" über "EASY DIALOG" –> "Installation" –> "Servicemenü für Händler" –> Kennzahl "8500" –> "Sonderfunktionen" aufrufen.
Auf "ja" oder "nein" stellen.

## 4. Ton-Einstellungen
Mit "blauer" Taste das Menü "Ton" aufrufen.
Im Menü "Voreinstellungen" sind die Einstellungen "Sprache", "Musik" oder "manuell" anwählbar.
Bei "manuell" sind Einstellungen des Klanges möglich. In den anderen Einstellungen sind die Werte fest vorgegeben.

## 5. Bild-Einstellungen
Mit "roter" Taste das Menü "Bild" aufrufen.
Im Menü "Voreinstellungen" sind die Einstellungen "Am Tag", "Am Abend" und "manuell" anwählbar.
Die "manuell"-Einstellung lässt eine Regulierung von Kontrast und Schärfe zu. In den anderen Einstellungen sind die Werte fest vorgegeben.

## 6. Einstellungen über die Senderbelegung

### 6.1 Zwangseinstellungen im Programm-Mode
Das Menü "Tonkanal" über "EASY DIALOG" –> "Programmtabelle" –> "grüne Taste" –> "Kanaleinstellungen ändern" aufrufen.
Sie können zwischen "automatisch", "Mono", "Mono B" und "Mono C" wählen.
Mono B = Orginalton
Mono C = Bei Digitalem Ton-Empfang (Nicam).

## 7. Werkseinstellung
Tasten " i ", "rot" und "OK" ruft die Werkseinstellwerte auf.

## Service and Special Functions

| | |
|---|---|
| Call up the Service Menu: | Button " i " (EASY DIALOG) |
| Call up the dialogue line: | Buttons "P+" / "P-" –> "OK" |
| Changing the setting in the dialogue line: | Buttons " ◄ " / " ► " –> "OK" |
| Back to previous menu: | Button "Blue" |
| Exit menu: | Button " i " |

Service menu for retailer (code number): "8500"

## 1. Switching-on Options

**1.1 ATS Reset**
Press mains button "ON" while holding down the " ► " button on the remote control.
- The basic analogue values are loaded.
- The ATS bit is set. When switching on the next time, this option releases the ATS euro plus function. The current programme allocation (channels) is cleared.

**1.2 Electronic Programme Lock (parental lock)**
Enter the key sequence "7 0 3 8 5 8 0" to cancel your personal code number.

**1.3 Software Version Number**
Call up the "EASY DIALOG" menu. Pressing the green button indicates the software version number.

**1.4 Flash Programming**
**Required equipment**
Flash programmer F-Prog 1 / from version 2.0 on or
Service Toolbox part number 772004001200.

**Required hardware**
Pentium-PC, Microsoft Windows 95
- Free memory of 32MB
- CD-ROM drive
- COM port
- Internet access

**1.5 Direct Display Type Adjustment**
If the menus can not be displayed any longer due to an incorrect display type adjustment, you can carry out the correct adjustment with the help of key short cuts.
Before and after the direct entry, the unit must be switched off and on again!
The " i ", "red" and numeric keys select the desired display type according the display lable.
The following digits indicate the display types:

1 SAM LTA260W2
2 AUO T260XW01
3 LPL LC260W01
4 CMO V270W1
5 CMO V296W1
6 AUO T296XW01
7 LPL LC300W01
8 LPL LC230W01

**2. Special Functions in the "Installation" Menu**

**2.1 Entry of Letters**
Call up the "Letter entry" menu via "EASY DIALOG" –> "Installation" –> "Special functions".
You may select between "Off", "On" and "Mix" for the programme selection letter entry.

**2.2 Visible or Unvisible "Sound scale" for all Programmes**
Call up the "Sound scale" menu via "EASY DIALOG" –> "Installation" –> "Special functions".
With "Off" selected, no volume bar is displayed.

**2.3 Switching on with Programme "1" or automatically**
Call up the "Switch on" menu via "EASY DIALOG" –> "Installation" –> "Special functions".
Set the option "Preset 1" or "Automatic".
With the "automatc" setting, the programme position selected when switching off is selected again when switching the set on again (Last station memory).

**2.4 "Megalogic Info"** (only if a connected Megalogic set is identified)
Call up the "Megalogic info" menu via "EASY DIALOG" –> "Installation" –> "Special functions".
The Megalogic control can be switched to "On" or "Off".

**2.5 Status Display**
Call up the "Status display" menu via "EASY DIALOG" –> "Installation" –> "Special functions".
You may select the position (top or bottom) where the information about the sound mode and the picture format is displayed.
With the "Off" option, no information is displayed when changing the programme.

**2.6 Automatic Volume**
Call up the "Automatic volume" menu via "EASY DIALOG" –> "Installation" –> "Special functions".
In the "On" position, the sound IC regulates the volume internally to the normal value (e.g. increased deviation in the case of advertising).

**2.7 Noise Reduction P1-P...**
Call up the "Noise reduction P1-P..." menu via "EASY DIALOG" –> "Installation" –> "Special functions. For the **programmes 1-P...** you may set the noise reduction to "off", "low" or "automatic".

**2.8 Picture Sharpness P1-P...**
Call up the "Sharpness P1-P..." menu via "EASY DIALOG" –> "Installation" –> "Special functions".
The picture sharpness is set for all programmes.

**2.9 Colour Match**
Call up the "Colour match" menu via "EASY DIALOG" –> "Installation" –> "Special functions" –> page 2.
The colour match (luma delay) is set for every programme.

**2.10 Automatic Format**
Call up the "Automatic format" menu via "EASY DIALOG" –> "Installation" –> "Special functions" –> page 2.
You can select which picture format (4:3, 14:9 Zoom or Panorama Zoom) is shown for programmes without letterbox and without transmitted WSS info (Wide Screen Signaling) and with an automatic picture format.

**3. Service Settings for the Retailer**

**3.1 Picture Settings**

**3.1.1 White Balance**
Call up the "White balance" menu via "EASY DIALOG" –> "Installation" –> "Dealer service menu" –> Code number "8500" –> "Picture settings".
Adjust the values for "red", "green" and "blue" so that a white picture is obtained (see Alignment, Point 5).

**3.1.2 Switching the Blue Screen Background On and Off**
Call up the "Blue screen" menu via "EASY DIALOG" –> "Installation" –> "Dealer service menu" –> Code number "8500" –> "Picture settings".
Select "On" or "Off".

**3.2 Hardware Equipment**

**3.2.1 Display Type**
Call up the "Display type" menu via "EASY DIALOG" –> "Installation" –> "Dealer service menu" –> Code number "8500" –> "Hardware equipment".
Select the appropriate display type.

**3.2.2 Tuner Type**
Call up the "Terrestrial tuner" menu via "EASY DIALOG" –> "Installation" –> "Dealer service menu" –> Code number "8500" –> "Hardware equipment".
Select the appropriate tuner type.





**3.2.3 Remote Control**
Call up the "Remote control" menu via "EASY DIALOG" –> "Installation" –> "Dealer service menu" –> Code number "8500" –> "Hardware equipment".
Select "TP100/TP110", "TP150", "TP140" or "PR11".

**3.2.4 Front S-VHS Jack**
Call up the "Front S-VHS Jack" menu via "EASY DIALOG" –> "Installation" –> "Dealer service menu" –> Code number "8500" –> "Hardware equipment".
Select "Yes" or "No".

**3.2.5 Subwoofer**
Call up the "Subwoofer" menu via "EASY DIALOG" –> "Installation" –> "Dealer service menu" –> Code number "8500" –> "Hardware equipment".
Select "Yes" or "No".

**3.2.6 Front-LED**
Call up the "Front-LED" menu via "EASY DIALOG" –> "Installation" –> "Dealer service menu" –> Code number "8500" –> "Hardware equipment".
Select "3 Colors" or "1 Color".

**3.3 Special Functions**

**3.3.1 Watchdog**
Call up the "Watchdog" menu via "EASY DIALOG" –> "Installation" –> "Dealer service menu" –> Code number "8500" –> "Special functions".
If the Watchdog timer is not reset in regular intervals, a new start is initialized.
Set the Watchdog to "Off" or "On".

**3.3.2 IR Data Programmer**
Call up the "IR-Data programmer" menu via "EASY DIALOG" –> "Installation" –> "Dealer service menu" –> Code number "8500" –> "Special functions". Using the "OK" button, it is possible to store up to 99 programme positions with data for channel, TV standard, Peri, 6-position station name, centre fine tuning, and "0" volume offset, with the help of the IR data programmer.

**3.3.3 AGC Setting**
Call up the "AGC setting" menu via "EASY DIALOG" –> "Installation" –> "Dealer service menu" –> Code number "8500" –> "Special functions".
Adjust the value so that the picture is just free of noise (see Alignment, Point 3).

**3.3.4 Cancel EPG Flash**
Call up the "Cancel EPG flash" menu via "EASY DIALOG" –> "Installation" –> "Dealer service menu" –> Code number "8500" –> "Special functions".
Pressing the "OK" button will clear the EPG Flash.

**3.3.5 Teletext Level 2.5 Support**
Call up the "Teletext level 2.5" menu via "EASY DIALOG" –> "Installation" –> "Dealer service menu" –> Code number "8500" –> "Special functions".
Select "Yes" or "No".

**4. Sound Settings**
Press the "blue" button to call up the "Sound" menu.
The settings "Speech", "Music" or "Manual" can be selected in the "Defaults" menu.
The "Manual" setting allows you to adjust the sound to suit your taste. For the other settings, specific values are preprogrammed.

**5. Picture Settings**
Press the "red" button to call up the "Picture" menu.
In the "Defaults" menu, the settings "Day", "Night", and "Manual" can be selected.
With the "Manual" option, you may set the contrast and the picture sharpness. For the other settings, specific values are preprogrammed.

**6. Settings via the Channel Allocation**

**6.1 Forced Settings in Programme Mode**
Call up the "Sound channel" menu via "EASY DIALOG" –> "Preset List" –> "green button" –> "Edit channel settings".
You may select between "Automatic", "Mono", "Mono B" and "Mono C".
Mono B = Original sound track
Mono C = For digital sound reception (Nicam).

**7. Factory Settings**
Press the " i ", "red" and "OK" buttons to call up the factory settings.

# Abgleich

Alle nicht beschriebenen Einstellelemente sind werkseitig abgeglichen und dürfen im Servicefall nicht verstellt werden.

| | |
|---|---|
| Aufruf des Service-Menüs: | Taste "i" (EASY DIALOG) |
| Aufruf der Dialogzeile: | Tasten "P+" / "P-" –> "OK" |
| Einstellung in der Dialogzeile ändern: | Tasten "◄" / "►" –> "OK" |
| Zurück ins vorherige Menü: | Taste "blau" |
| Beenden des Menüs: | Taste "i" |
| Servicemenü für Händler: | Codezahl "8500" |

**Messgeräte:** 100MHz Oszilloskop mit Tastkopf 10:1, Farbbildgenerator.

**Servicearbeiten nach Austausch ...**
**... des Displays,** Abgleich 1, 4
**... der Chasselsplatte,** Ableich 1...3, 5
**... der M2-Platte,** Ableich 1, 4
**... des Tuners,** Ableich 2, 3

| Abgleich | Vorbereitung | Abgleichvorgang |
|---|---|---|
| 1. Displaytyp | Menü "Displaytyp" über "EASY DIALOG" –> "Installation" –> "Servicemenü für Händler" –> "8500" –> "Hardware-Einstellungen" aufrufen. | Auf das im Gerät **eingebaute Display** einstellen. |
| 2. Terr. Tuner-Typ | Menü "Terr. Tuner" über "EASY DIALOG" –> "Installation" –> "Servicemenü für Händler" –> Kennzahl "8500" –> "Hardware-Einstellungen" aufrufen. | Auf den im Gerät **eingebauten Tuner** einstellen. |
| 3. Tuner-AGC | 100MHz-Oszilloskop an Tunerkontakt 10 oder 11 gegen Tunermasse anschließen.<br>Testbild (mit abgeschaltetem Tonträger) über die Antenne einspeisen, 70...80dBµV.<br>Das Menü "AGC-Einstellung" über "EASY DIALOG " –> "Installation" –> "Servicemenü für Händler" –> "8500" –> "Sonderfunktionen" aufrufen. | Auf **300-350mV$_{ss}$** einstellen. |
| 4. Weißwert | Grautreppe mit Burst einspeisen.<br>Weißbalance: Mittenstellung<br>Kontrast: Maximum<br>Farbkontrast: Mittelwert<br>Bildschirmhelligkeit: Mittelwert<br>Neigungswinkel: Mittelwert<br>Menü "Weißabgleich" über "EASY DIALOG" –> "Installation" –> "Servicemenü für Händler" –> "8500" –> "Bildeinstellungen" aufrufen. | Die Werte für **rot, grün** und **blau** so einstellen, dass das Bild unbunt wird. |
| 5. Bildgeometrie VGA | Gerät in Programmstellung "AV06" oder "AV07" schalten und Geometriebild über die VGA- oder DVI-Buchse einspeisen.<br>Menü "Reset" über "EASY DIALOG " –> "Installation" –> "Servicemenü für Händler" –> "8500" –> Bildgeometrie aufrufen. | Mit **Bildhöhe, Bildbreite, Vert. Pos.** und **Horiz. Pos.** das Testbild in Bildschirmmitte bringen und symmetrische Beschreibung des Displays einstellen.<br>**Speichern:**<br>Der eingestellte Wert wird durch Drücken der "gelben" Taste gespeichert.<br>Die Bildgeometrie stellt sich nach jedem Einschalten auf den zuletzt abgespeicherten Wert ein. |





# Alignment

All adjustment controls not mentioned in this description are adjusted during production and must not be re-adjusted in the case of repairs.

| | |
|---|---|
| Call up the service menu: | Button "i" (EASY DIALOG) |
| Call up the dialogue line: | Buttons "P+" / "P-" –> "OK" |
| Change setting in the dialogue line: | Buttons "◄" / "►" –> "OK" |
| Back to previous menu: | button "blue" |
| Exit menu: | Button "i" |
| Service menu for the dealer: | Code no. "8500" |

**Measuring instruments:** 100MHz oscilloscope with 10:1 test probe, colour test pattern generator.

**Service work after changing the ...**
**... Display,** Adjustment 1, 4
**... Chassis Board,** Adjustment 1...3, 5
**... M2 Board,** Adjustment 1, 4
**... Tuner,** Adjustment 2, 3

| Alignment | Preparations | Alignment procedure |
|---|---|---|
| 1. Display Type | Call up the "Display type" menu via "EASY DIALOG" –> "Installation" –> "Dealer service menu" –> Code number "8500" –> "Hardware equipment". | Select the **appropriate display type.** |
| 2. Terr. Tuner Type | Call up the "Terrestrial tuner" menu via "EASY DIALOG" –> "Installation" –> "Dealer service menu" –> Code number "8500" –> "Hardware equipment". | Select the **appropriate tuner type.** |
| 3. Tuner AGC | Connect the 100MHz oscilloscope to the tuner contact 10 or 11 and to tuner ground.<br>Feed in a test pattern (sound carrier switched off) via the aerial, 70...80dBµV.<br>Call up the "AGC setting" menu via "EASY DIALOG" –> "Installation" –> "Dealer service menu" –> "8500" –> "Special functions". | Set to **300-350mV$_{pp}$**. |
| 4. White level | Feed in a grey scale test pattern with burst.<br>White balance: Central position<br>Contrast: Maximum<br>Colour contrast: Mean value<br>Screen brighness: Mean value<br>Tilt angle: Mean value<br>Call up the "White balance" menu via "EASY DIALOG" –> "Installation" –> "Dealer service menu" –> "8500" –> "Picture settings". | Adjust the values for **red, green** and **blue** so that the picture becomes achromatic. |
| 5. Screen geometry VGA | Switch the set to channel position "AV06" or "AV07" and feed in a geometry test pattern via the VGA or DVI socket.<br>Call up the "Reset" menu via "EASY DIALOG" –> "Installation" –> "Dealer service menu" –> "8500" –> "Screen geometry". | Using the controls for **Height, Width, Vert. shift.** and **Horiz. shift,** move the test pattern into the centre of the picture screen, and then adjust a symmetrical display reading.<br>**Saving:**<br>The set value is saved by pressing the "yellow" button.<br>The picture geometry adjusts itself to the last saved value when switching the TV set on again. |

# Platinenabbildungen und Schaltpläne / Layout of the PCBs and Circuit Diagrams

## Buchsen-Platte / Socket Board

Bestückungsseite, Ansicht von oben / Component Side, Top View

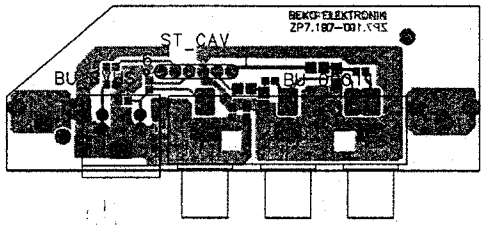


Lötseite, Ansicht von unten / Solder Side, Bottom View

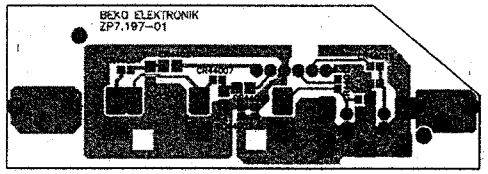


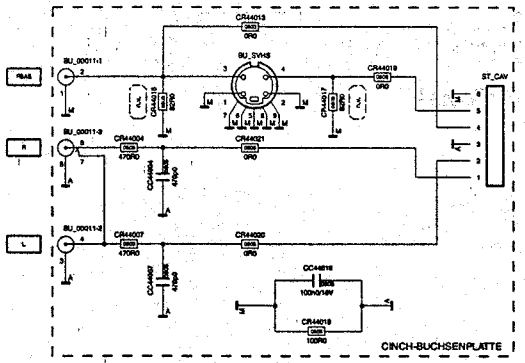






## Chassisplatte, NF-Platte / Chassis Board, AF Board

**Koordinaten für die Bauteile auf der Bestückungsseite / Coordiantes of the components on the Component Side**

| POS. | X | Y | POS. | X | Y | POS. | X | Y | POS. | X | Y | POS. | X | Y | POS. | X | Y | POS. | X | Y | POS. | X | Y |
|---|---|---|---|---|---|---|---|---|---|---|---|---|---|---|---|---|---|---|---|---|---|---|---|
| BR61511 | 84 | 176 | C41511 | 293 | 187 | C60591 | 120 | 125 | C61918 | 343 | 224 | IC40801 | 266 | 247 | L61807 | 42 | 250 | R60590 | 128 | 133 | ST_PRG1 | 242 | 40 |
| BR61522 | 84 | 192 | C41514 | 298 | 192 | C61518 | 67 | 251 | C61951 | 349 | 165 | IC41530 | 277 | 200 | | | | R61510 | 59 | 177 | ST_SPDIF | 265 | 199 |
| BR61523 | 23 | 247 | C41531 | 277 | 168 | C61519 | 54 | 251 | C61952 | 340 | 165 | IC43570 | 198 | 83 | L61811 | 91 | 220 | R61512 | 101 | 166 | | | |
| BR61524 | 18 | 247 | C41533 | 285 | 188 | C61520 | 48 | 241 | C62501 | 40 | 51 | | | | L61825 | 349 | 213 | | | | T60540 | 45 | 102 |
| | | | C43516 | 155 | 49 | C61521 | 57 | 235 | C62502 | 81 | 51 | IC60511 | 18 | 139 | L61831 | 351 | 185 | R61514 | 54 | 178 | T60585 | 25 | 110 |
| BU1 | 9 | 249 | | | | | | | | | | IC61604 | 20 | 171 | L61833 | 335 | 193 | R61516 | 55 | 182 | T61516 | 58 | 164 |
| BU_AV2 | 148 | 34 | C43517 | 164 | 51 | C61523 | 205 | 182 | C62506 | 35 | 21 | IC61830 | 344 | 195 | L61847 | 311 | 229 | R61952 | 331 | 156 | T61517 | 65 | 160 |
| BU_EURO1 | 164 | 36 | C43575 | 180 | 87 | C61524 | 194 | 187 | C62507 | 43 | 21 | IC61841 | 316 | 244 | | | | R62501 | 32 | 71 | T61521 | 85 | 166 |
| BU_KH1 | 218 | 32 | C43589 | 212 | 42 | C61528 | 67 | 240 | C70401 | 144 | 93 | IC61900 | 352 | 256 | L61900 | 323 | 225 | R62502 | 35 | 54 | | | |
| BU_VGA_B | 108 | 39 | C43617 | 136 | 59 | C61532 | 31 | 195 | | | | | | | L61902 | 340 | 242 | R62503 | 23 | 60 | T61523 | 54 | 170 |
| BU_VGA_T | 132 | 32 | C43618 | 145 | 74 | C61544 | 14 | 182 | | | | | | | L61904 | 325 | 214 | | | | T61524 | 348 | 219 |
| | | | | | | | | | D60501 | 83 | 70 | KAB1 | 261 | 239 | L61906 | 333 | 223 | S62501 | 20 | 32 | T61530 | 33 | 201 |
| C29513 | 135 | 62 | C60500 | 116 | 159 | C61553 | 18 | 185 | D60516 | 32 | 125 | KAB2 | 295 | 231 | L61951 | 340 | 171 | SI40521 | 310 | 178 | T61951 | 355 | 170 |
| C29515 | 143 | 57 | C60501 | 95 | 57 | C61593 | 351 | 171 | D60579 | 98 | 114 | | | | L62501 | 61 | 63 | SI60511 | 55 | 144 | | | |
| C29616 | 125 | 72 | C60502 | 85 | 79 | C61601 | 27 | 183 | D60581 | 80 | 112 | L29730 | 21 | 240 | | | | SI60521 | 98 | 99 | TR60500 | 89 | 139 |
| C29618 | 115 | 56 | C60503 | 92 | 65 | C61602 | 134 | 178 | D60586 | 68 | 133 | L29731 | 14 | 241 | | | | SI62501 | 16 | 61 | TR60501 | 75 | 121 |
| C29629 | 94 | 46 | C60504 | 99 | 78 | C61603 | 22 | 161 | | | | L31014 | 345 | 43 | OK60511 | 51 | 159 | | | | TR60510 | 38 | 150 |
| | | | | | | | | | D60587 | 65 | 129 | L32051 | 326 | 152 | OK60590 | 22 | 157 | | | | TR60520 | 13 | 152 |
| | | | | | | | | | D60588 | 20 | 109 | L32094 | 327 | 148 | | | | ST_AL | 306 | 134 | TU32000 | 321 | 47 |
| C31001 | 329 | 71 | C60507 | 89 | 100 | C61604 | 20 | 191 | D61531 | 38 | 189 | | | | Q32034 | 332 | 140 | ST_AR | 316 | 149 | | | |
| C31006 | 327 | 79 | C60508 | 89 | 100 | C61605 | 142 | 177 | D61601 | 26 | 158 | L32095 | 344 | 149 | Q33046 | 258 | 195 | ST_AS | 306 | 149 | | | |
| C31014 | 336 | 48 | C60509 | 88 | 98 | C61804 | 30 | 251 | D61604 | 34 | 176 | L33001 | 259 | 170 | | | | ST_AUDI1 | 287 | 145 | _D61411 | 81 | 218 |
| C31015 | 339 | 62 | C60511 | 41 | 131 | C61805 | 30 | 237 | | | | L43613 | 161 | 173 | R31001 | 333 | 79 | ST_CAV | 232 | 72 | _D61511 | 81 | 170 |
| C32002 | 315 | 134 | C60513 | 62 | 137 | C61811 | 187 | 181 | D61801 | 40 | 238 | L60579 | 70 | 114 | R40521 | 319 | 206 | | | | _D61522 | 81 | 194 |
| | | | | | | | | | D61802 | 20 | 226 | L60585 | 37 | 123 | R40522 | 284 | 211 | ST_I2C_3 | 176 | 157 | _T60579 | 59 | 120 |
| C32033 | 328 | 48 | C60517 | 28 | 130 | C61813 | 27 | 206 | D61803 | 325 | 243 | | | | R40525 | 287 | 208 | ST_I2S | 208 | 213 | _T61511 | 81 | 170 |
| C32048 | 317 | 126 | C60539 | 35 | 90 | C61825 | 339 | 211 | D61952 | 356 | 163 | L61510 | 75 | 171 | R60511 | 33 | 136 | ST_INAV | 206 | 72 | _T61522 | 81 | 194 |
| C33002 | 258 | 213 | C60553 | 22 | 86 | C61831 | 201 | 205 | | | | L61511 | 55 | 206 | | | | ST_IRBA | 330 | 29 | | | |
| C33003 | 265 | 190 | C60561 | 28 | 91 | C61833 | 339 | 180 | F32018 | 332 | 93 | L61512 | 55 | 201 | R60522 | 47 | 130 | ST_KB | 309 | 36 | | | |
| C33005 | 258 | 208 | C60579 | 109 | 83 | C61845 | 321 | 255 | F32021 | 327 | 104 | L61513 | 93 | 169 | R60575 | 58 | 105 | | | | | | |
| | | | | | | | | | F32023 | 314 | 104 | L61518 | 88 | 234 | R60576 | 64 | 105 | ST_LUEF | 331 | 183 | | | |
| C33006 | 211 | 193 | C60581 | 105 | 107 | C61847 | 321 | 244 | F32024 | 336 | 104 | | | | R60577 | 61 | 105 | ST_NETZ | 78 | 41 | | | |
| C40521 | 270 | 210 | C60582 | 20 | 120 | C61900 | 335 | 235 | F32061 | 226 | 102 | L61520 | 86 | 244 | R60578 | 53 | 107 | ST_OUTAV | 174 | 73 | | | |
| C40522 | 274 | 221 | C60586 | 33 | 110 | C61911 | 348 | 248 | | | | L61522 | 102 | 171 | | | | ST_PF1 | 49 | 67 | | | |
| C40524 | 282 | 215 | C60587 | 31 | 121 | C61913 | 203 | 197 | IC33010 | 234 | 239 | L61601 | 94 | 206 | R60579 | 109 | 90 | ST_PF2 | 83 | 59 | | | |
| C40525 | 265 | 228 | C60590 | 120 | 99 | C61915 | 321 | 234 | IC33080 | 225 | 218 | L61801 | 25 | 225 | R60585 | 16 | 117 | | | | | | |

**Chassisplatte, NF-Platte / Chassis Board, AF Board** (vergrößert / enlarged)

Bestückungsseite, Ansicht von oben / Component Side, Top View

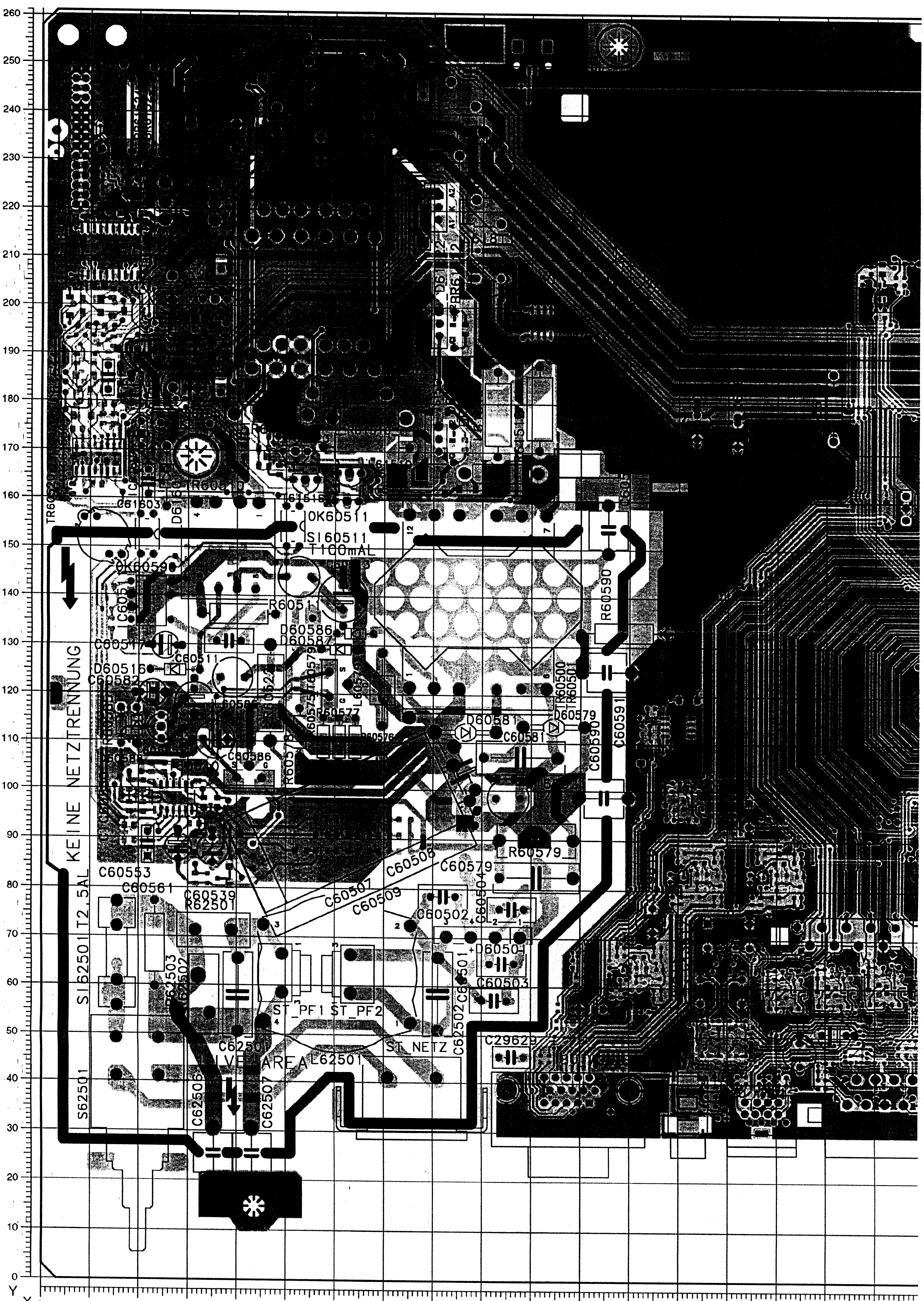

**Chassisplatte, NF-Platte / Chassis Board, AF Board**

Bestückungsseite, Ansicht von oben / Component Side, Top View

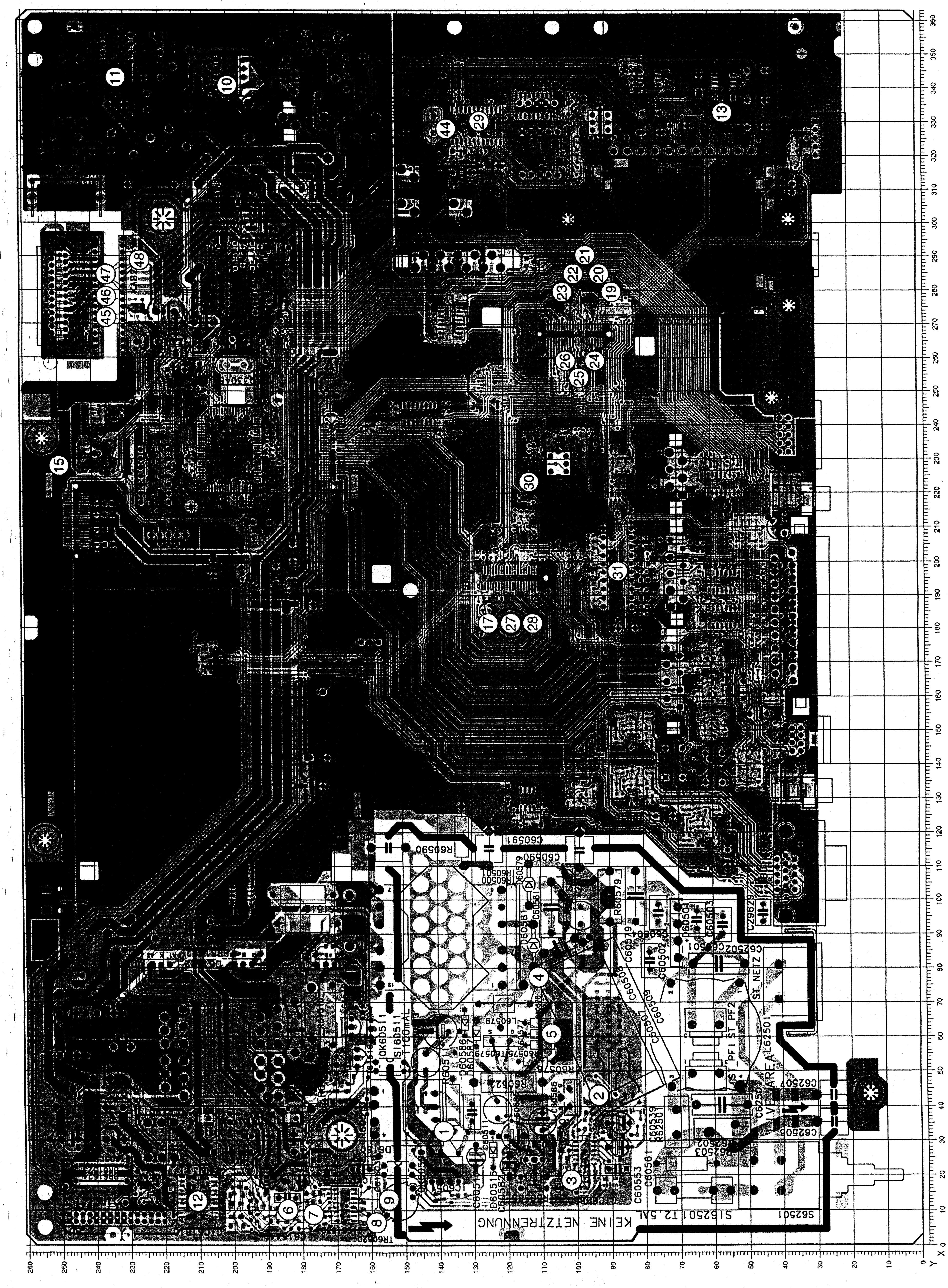

**Chassisplatte, NF-Platte / Chassis Board, AF Board** (vergrößert / enlarged)

Bestückungsseite, Ansicht von oben / Component Side, Top View

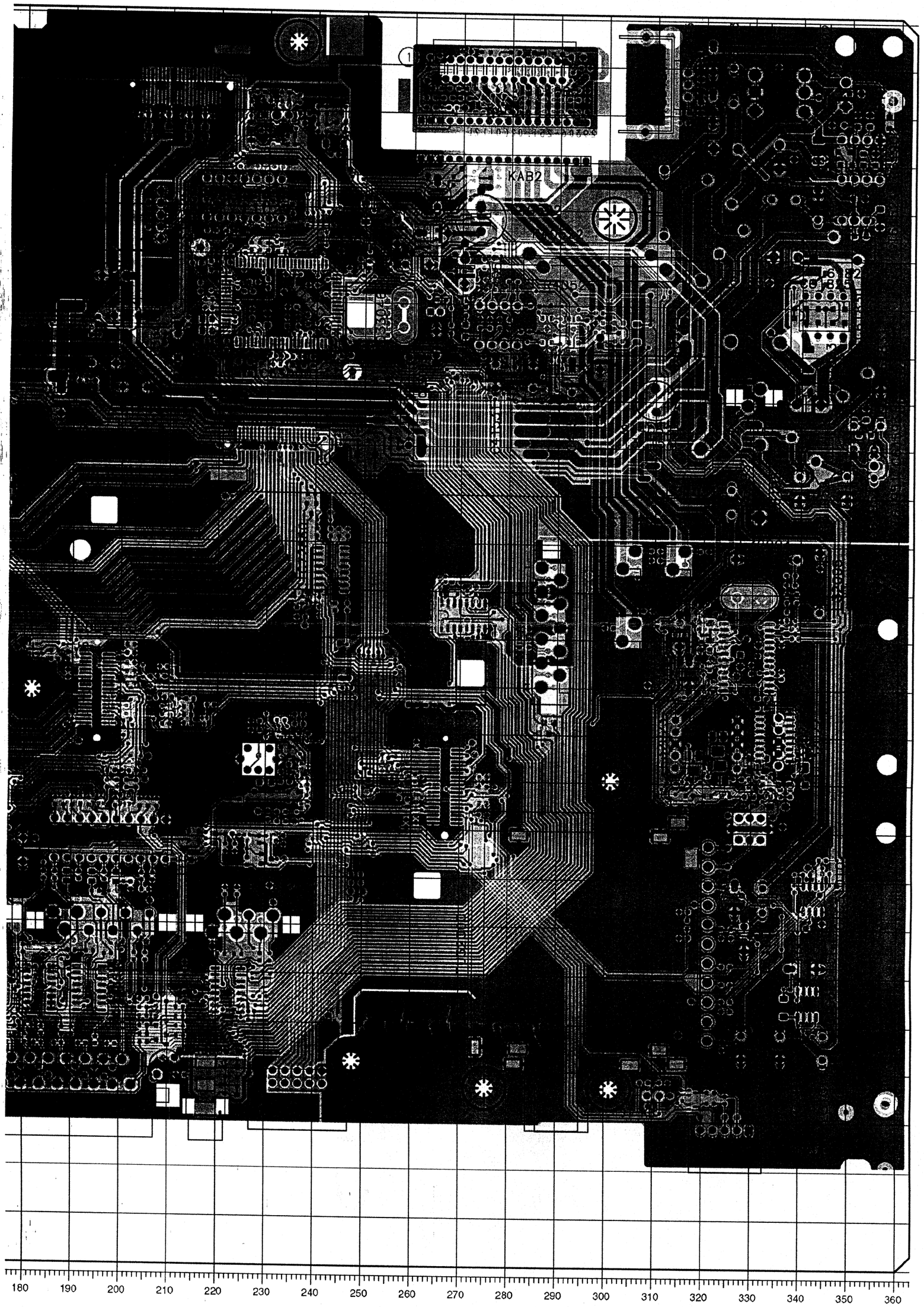

## Chassisplatte, NF-Platte / Chassis Board, AF Board

Koordinaten für die SMD-Bauteile auf der Bestückungsseite / Coordiantes of the SMD components on the Component Side

| POS. | X | Y |
|---|---|---|
| CBU_PRO1 | 195 | 118 |
| CBU_PRO2 | 267 | 99 |
| CBU_SCAG | 212 | 245 |
| CBU_SCAV | 232 | 170 |
| CC29507 | 136 | 46 |
| CC29537 | 141 | 46 |
| CC29550 | 128 | 110 |
| CC29551 | 123 | 116 |
| CC29553 | 123 | 114 |
| CC29612 | 154 | 88 |
| CC29631 | 123 | 55 |
| CC29633 | 149 | 76 |
| CC29642 | 138 | 88 |
| CC29672 | 126 | 69 |
| CC29751 | 167 | 207 |
| CC31010 | 342 | 82 |
| CC32033 | 336 | 123 |
| CC32034 | 320 | 128 |
| CC32035 | 336 | 130 |
| CC32036 | 336 | 134 |
| CC32047 | 321 | 125 |
| CC33001 | 247 | 207 |
| CC33003 | 233 | 211 |
| CC33007 | 213 | 196 |
| CC33008 | 244 | 189 |
| CC33009 | 217 | 196 |
| CC33011 | 217 | 194 |
| CC33014 | 234 | 235 |
| CC33015 | 229 | 242 |
| CC33016 | 233 | 244 |
| CC33051 | 232 | 187 |
| CC33052 | 236 | 189 |
| CC33053 | 218 | 200 |
| CC33054 | 218 | 199 |
| CC40551 | 242 | 240 |
| CC40552 | 243 | 231 |
| CC40801 | 278 | 245 |
| CC40808 | 280 | 244 |
| CC43511 | 287 | 111 |
| CC43512 | 170 | 46 |
| CC43513 | 167 | 46 |
| CC43515 | 288 | 113 |
| CC43516 | 161 | 45 |
| CC43518 | 159 | 43 |
| CC43519 | 178 | 48 |
| CC43520 | 181 | 49 |
| CC43561 | 187 | 80 |
| CC43569 | 199 | 79 |
| CC43573 | 187 | 95 |
| CC43574 | 207 | 80 |
| CC43575 | 205 | 80 |
| CC43578 | 194 | 79 |
| CC43596 | 205 | 53 |
| CC43597 | 197 | 99 |
| CC43601 | 201 | 99 |

| POS. | X | Y |
|---|---|---|
| CC43610 | 149 | 41 |
| CC43611 | 142 | 41 |
| CC43626 | 149 | 62 |
| CC43646 | 159 | 63 |
| CC43666 | 170 | 63 |
| CC43686 | 128 | 100 |
| CC60512 | 14 | 142 |
| CC60555 | 21 | 101 |
| CC60556 | 21 | 96 |
| CC60557 | 18 | 92 |
| CC60558 | 25 | 104 |
| CC60559 | 36 | 97 |
| CC60562 | 31 | 93 |
| CC60574 | 33 | 97 |
| CC60585 | 23 | 104 |
| CC61504 | 14 | 196 |
| CC61519 | 49 | 166 |
| CC61523 | 47 | 173 |
| CC61525 | 193 | 193 |
| CC61534 | 11 | 163 |
| CC61542 | 7 | 174 |
| CC61551 | 15 | 176 |
| CC61552 | 14 | 179 |
| CC70513 | 172 | 165 |
| CC72505 | 192 | 183 |
| CC72530 | 98 | 246 |
| CC72540 | 217 | 239 |
| CC72542 | 213 | 239 |
| CC72544 | 208 | 239 |
| CC72546 | 204 | 239 |
| CC80505 | 189 | 122 |
| CC80507 | 202 | 120 |
| CC80511 | 202 | 126 |
| CC80514 | 202 | 122 |
| CC80515 | 202 | 124 |
| CC80517 | 189 | 125 |
| CC80519 | 202 | 128 |
| CC80525 | 275 | 96 |
| CC80527 | 261 | 92 |
| CC80531 | 259 | 91 |
| CC80532 | 208 | 121 |
| CC80535 | 259 | 96 |
| CC80537 | 261 | 97 |
| CC80543 | 258 | 97 |
| CC80544 | 224 | 86 |
| CC80546 | 220 | 88 |
| CC80551 | 275 | 101 |
| CC80552 | 209 | 123 |
| CC80555 | 261 | 108 |
| CC80565 | 261 | 101 |
| CC84024 | 189 | 79 |
| CD29554 | 132 | 120 |
| CD29556 | 122 | 108 |
| CD31014 | 337 | 54 |
| CD32031 | 321 | 132 |

| POS. | X | Y |
|---|---|---|
| CD40501 | 226 | 236 |
| CD40522 | 243 | 233 |
| CD40554 | 250 | 219 |
| CD41514 | 306 | 195 |
| CD60540 | 39 | 82 |
| CD61501 | 14 | 200 |
| CD61502 | 10 | 201 |
| CD61503 | 10 | 198 |
| CD61504 | 8 | 177 |
| CD61505 | 19 | 199 |
| CD61506 | 9 | 185 |
| CD61822 | 6 | 200 |
| CD61833 | 341 | 190 |
| CD61900 | 343 | 234 |
| CD61902 | 356 | 220 |
| CF32022 | 335 | 110 |
| CIC29550 | 130 | 114 |
| CIC29751 | 171 | 204 |
| CIC31010 | 343 | 77 |
| CIC31015 | 342 | 55 |
| CIC32040 | 329 | 127 |
| CIC33000 | 233 | 200 |
| CIC41540 | 271 | 135 |
| CIC43510 | 223 | 56 |
| CIC43520 | 183 | 56 |
| CIC43530 | 194 | 56 |
| CIC60550 | 27 | 98 |
| CIC61530 | 12 | 168 |
| CIC61610 | 102 | 197 |
| CIC61810 | 14 | 211 |
| CIC72550 | 243 | 144 |
| CL29549 | 106 | 56 |
| CL29551 | 105 | 53 |
| CL61517 | 45 | 167 |
| CL61523 | 45 | 171 |
| CL61800 | 18 | 219 |
| CL72540 | 217 | 235 |
| CL72542 | 213 | 235 |
| CL72544 | 209 | 235 |
| CL72546 | 205 | 235 |
| CR29507 | 135 | 53 |
| CR29509 | 138 | 49 |
| CR29511 | 138 | 53 |
| CR29519 | 138 | 46 |
| CR29537 | 141 | 53 |
| CR29539 | 144 | 49 |
| CR29541 | 144 | 53 |
| CR29543 | 144 | 46 |
| CR29546 | 136 | 83 |
| CR29547 | 102 | 45 |
| CR29551 | 109 | 65 |
| CR29553 | 109 | 62 |
| CR29555 | 123 | 112 |
| CR29556 | 104 | 45 |

| POS. | X | Y |
|---|---|---|
| CR29557 | 124 | 118 |
| CR29573 | 145 | 78 |
| CR29574 | 147 | 78 |
| CR29580 | 150 | 79 |
| CR29581 | 134 | 79 |
| CR29582 | 121 | 60 |
| CR29583 | 129 | 78 |
| CR29584 | 131 | 78 |
| CR29593 | 117 | 59 |
| CR29594 | 118 | 59 |
| CR29600 | 145 | 83 |
| CR29602 | 150 | 83 |
| CR29606 | 147 | 86 |
| CR29608 | 154 | 79 |
| CR29610 | 154 | 77 |
| CR29612 | 154 | 86 |
| CR29614 | 147 | 88 |
| CR29616 | 152 | 83 |
| CR29630 | 128 | 83 |
| CR29632 | 134 | 83 |
| CR29636 | 131 | 86 |
| CR29638 | 138 | 79 |
| CR29640 | 138 | 77 |
| CR29642 | 138 | 86 |
| CR29644 | 131 | 88 |
| CR29660 | 116 | 64 |
| CR29662 | 122 | 64 |
| CR29666 | 118 | 67 |
| CR29668 | 126 | 60 |
| CR29670 | 126 | 58 |
| CR29672 | 126 | 67 |
| CR29674 | 118 | 69 |
| CR29676 | 124 | 64 |
| CR29738 | 15 | 228 |
| CR29740 | 12 | 224 |
| CR29742 | 12 | 227 |
| CR29744 | 19 | 229 |
| CR29746 | 16 | 228 |
| CR29751 | 170 | 200 |
| CR29752 | 172 | 200 |
| CR29753 | 169 | 209 |
| CR29754 | 171 | 209 |
| CR29755 | 174 | 207 |
| CR29757 | 176 | 207 |
| CR31011 | 346 | 82 |
| CR31012 | 345 | 85 |
| CR31013 | 339 | 79 |
| CR32003 | 325 | 98 |
| CR32004 | 321 | 98 |
| CR32006 | 329 | 101 |
| CR32008 | 332 | 101 |
| CR32009 | 317 | 98 |
| CR32011 | 336 | 99 |
| CR32015 | 334 | 99 |
| CR32021 | 338 | 99 |

| POS. | X | Y |
|---|---|---|
| CR32031 | 319 | 134 |
| CR32070 | 339 | 131 |
| CR32074 | 339 | 133 |
| CR32078 | 233 | 113 |
| CR33014 | 236 | 243 |
| CR33015 | 234 | 233 |
| CR33016 | 233 | 242 |
| CR33018 | 228 | 244 |
| CR33095 | 251 | 208 |
| CR33097 | 230 | 212 |
| CR33098 | 228 | 212 |
| CR33099 | 226 | 212 |
| CR40504 | 226 | 241 |
| CR40551 | 245 | 236 |
| CR40552 | 242 | 237 |
| CR40553 | 240 | 240 |
| CR40555 | 240 | 237 |
| CR40804 | 268 | 241 |
| CR41504 | 298 | 195 |
| CR41505 | 296 | 197 |
| CR41506 | 290 | 192 |
| CR41507 | 290 | 197 |
| CR41508 | 298 | 199 |
| CR41509 | 298 | 197 |
| CR41513 | 289 | 189 |
| CR41514 | 302 | 193 |
| CR43510 | 225 | 64 |
| CR43511 | 172 | 46 |
| CR43512 | 205 | 63 |
| CR43513 | 165 | 46 |
| CR43516 | 159 | 40 |
| CR43517 | 159 | 41 |
| CR43518 | 180 | 46 |
| CR43519 | 177 | 48 |
| CR43521 | 198 | 45 |
| CR43522 | 187 | 45 |
| CR43523 | 192 | 45 |
| CR43525 | 176 | 45 |
| CR43526 | 188 | 48 |
| CR43527 | 183 | 45 |
| CR43528 | 190 | 64 |
| CR43529 | 184 | 48 |
| CR43530 | 186 | 64 |
| CR43531 | 175 | 48 |
| CR43533 | 203 | 63 |
| CR43534 | 180 | 64 |
| CR43535 | 195 | 46 |
| CR43536 | 221 | 64 |
| CR43538 | 198 | 64 |
| CR43544 | 194 | 64 |
| CR43545 | 190 | 48 |
| CR43547 | 224 | 77 |
| CR43549 | 222 | 77 |
| CR43551 | 229 | 63 |
| CR43553 | 231 | 63 |

| POS. | X | Y |
|---|---|---|
| CR43567 | 192 | 80 |
| CR43571 | 213 | 49 |
| CR43572 | 205 | 47 |
| CR43573 | 205 | 49 |
| CR43574 | 208 | 95 |
| CR43575 | 202 | 78 |
| CR43576 | 205 | 77 |
| CR43579 | 197 | 80 |
| CR43580 | 195 | 76 |
| CR43587 | 205 | 45 |
| CR43588 | 213 | 47 |
| CR43589 | 213 | 51 |
| CR43590 | 206 | 95 |
| CR43591 | 188 | 95 |
| CR43592 | 205 | 51 |
| CR43594 | 190 | 95 |
| CR43595 | 198 | 101 |
| CR43596 | 205 | 54 |
| CR43597 | 199 | 99 |
| CR43598 | 203 | 101 |
| CR43599 | 194 | 95 |
| CR43600 | 204 | 95 |
| CR43601 | 192 | 95 |
| CR43602 | 199 | 95 |
| CR43604 | 203 | 99 |
| CR43610 | 147 | 41 |
| CR43611 | 144 | 41 |
| CR43615 | 151 | 42 |
| CR43616 | 151 | 40 |
| CR43620 | 154 | 56 |
| CR43621 | 184 | 80 |
| CR43622 | 149 | 56 |
| CR43624 | 152 | 59 |
| CR43626 | 151 | 64 |
| CR43631 | 154 | 62 |
| CR43640 | 164 | 57 |
| CR43642 | 159 | 57 |
| CR43644 | 162 | 60 |
| CR43646 | 161 | 64 |
| CR43651 | 164 | 63 |
| CR43660 | 174 | 57 |
| CR43662 | 170 | 57 |
| CR43664 | 173 | 60 |
| CR43666 | 171 | 65 |
| CR43671 | 175 | 63 |
| CR43680 | 133 | 95 |
| CR43682 | 128 | 95 |
| CR43684 | 131 | 98 |
| CR43686 | 130 | 102 |
| CR43691 | 133 | 100 |
| CR60517 | 14 | 134 |
| CR60539 | 32 | 82 |
| CR60555 | 18 | 101 |
| CR60556 | 18 | 96 |
| CR60563 | 18 | 89 |

| POS. | X | Y |
|---|---|---|
| CR60573 | 52 | 122 |
| CR61501 | 15 | 192 |
| CR61502 | 11 | 189 |
| CR61503 | 7 | 189 |
| CR61504 | 8 | 196 |
| CR61505 | 9 | 182 |
| CR61513 | 86 | 172 |
| CR61521 | 86 | 196 |
| CR61524 | 9 | 180 |
| CR61531 | 6 | 162 |
| CR61551 | 13 | 176 |
| CR70514 | 213 | 53 |
| CR72530 | 239 | 160 |
| CR72552 | 240 | 152 |
| CR72554 | 244 | 137 |
| CR72556 | 243 | 152 |
| CR72557 | 247 | 137 |
| CR72562 | 247 | 152 |
| CR72563 | 249 | 97 |
| CR72564 | 245 | 152 |
| CR72565 | 249 | 99 |
| CR80505 | 186 | 125 |
| CR80507 | 201 | 110 |
| CR80515 | 237 | 138 |
| CR80531 | 232 | 88 |
| CR80533 | 226 | 83 |
| CR80535 | 229 | 88 |
| CR80539 | 186 | 126 |
| CR80542 | 223 | 89 |
| CR80543 | 222 | 86 |
| CR80551 | 210 | 117 |
| CR80552 | 214 | 115 |
| CR80555 | 214 | 117 |
| CR80556 | 214 | 113 |
| CR80557 | 214 | 112 |
| CR80558 | 219 | 116 |
| CR80559 | 209 | 111 |
| CR80566 | 325 | 35 |
| CR80567 | 322 | 34 |
| CR80576 | 275 | 99 |
| CR80583 | 322 | 36 |
| CST_EMV | 100 | 253 |
| CT29510 | 136 | 50 |
| CT29530 | 141 | 50 |
| CT29610 | 147 | 82 |
| CT29615 | 155 | 82 |
| CT29620 | 151 | 87 |
| CT29630 | 131 | 82 |
| CT29635 | 139 | 82 |
| CT29640 | 134 | 87 |
| CT29660 | 119 | 63 |
| CT29665 | 126 | 63 |
| CT29670 | 122 | 68 |
| CT29740 | 15 | 225 |

| POS. | X | Y |
|---|---|---|
| CT29751 | 175 | 210 |
| CT32005 | 330 | 99 |
| CT32064 | 311 | 134 |
| CT32065 | 232 | 110 |
| CT32070 | 238 | 99 |
| CT32075 | 238 | 95 |
| CT32086 | 238 | 103 |
| CT40550 | 237 | 239 |
| CT40551 | 245 | 239 |
| CT41504 | 293 | 192 |
| CT41505 | 293 | 197 |
| CT41506 | 287 | 192 |
| CT41507 | 287 | 197 |
| CT41508 | 302 | 196 |
| CT43571 | 209 | 50 |
| CT43588 | 209 | 46 |
| CT43589 | 209 | 54 |
| CT43620 | 155 | 59 |
| CT43625 | 149 | 59 |
| CT43640 | 165 | 60 |
| CT43645 | 159 | 60 |
| CT43660 | 175 | 60 |
| CT43665 | 170 | 60 |
| CT43680 | 134 | 97 |
| CT43685 | 128 | 98 |
| CT60302 | 35 | 82 |
| CT60511 | 13 | 138 |
| CT61501 | 12 | 193 |
| CT61502 | 8 | 193 |
| CT80205 | 196 | 95 |
| CT80206 | 202 | 95 |
| CT80505 | 182 | 127 |
| CT80510 | 239 | 157 |
| CT80551 | 217 | 112 |
| CT80552 | 211 | 114 |
| CT84003 | 318 | 36 |
| CT84004 | 318 | 33 |
| CT84026 | 226 | 88 |
| CT84027 | 230 | 84 |

**Chassisplatte, NF-Platte / Chassis Board, AF Board** (vergrößert / enlarged)

Bestückungsseite, Ansicht von oben / Component Side, Top View

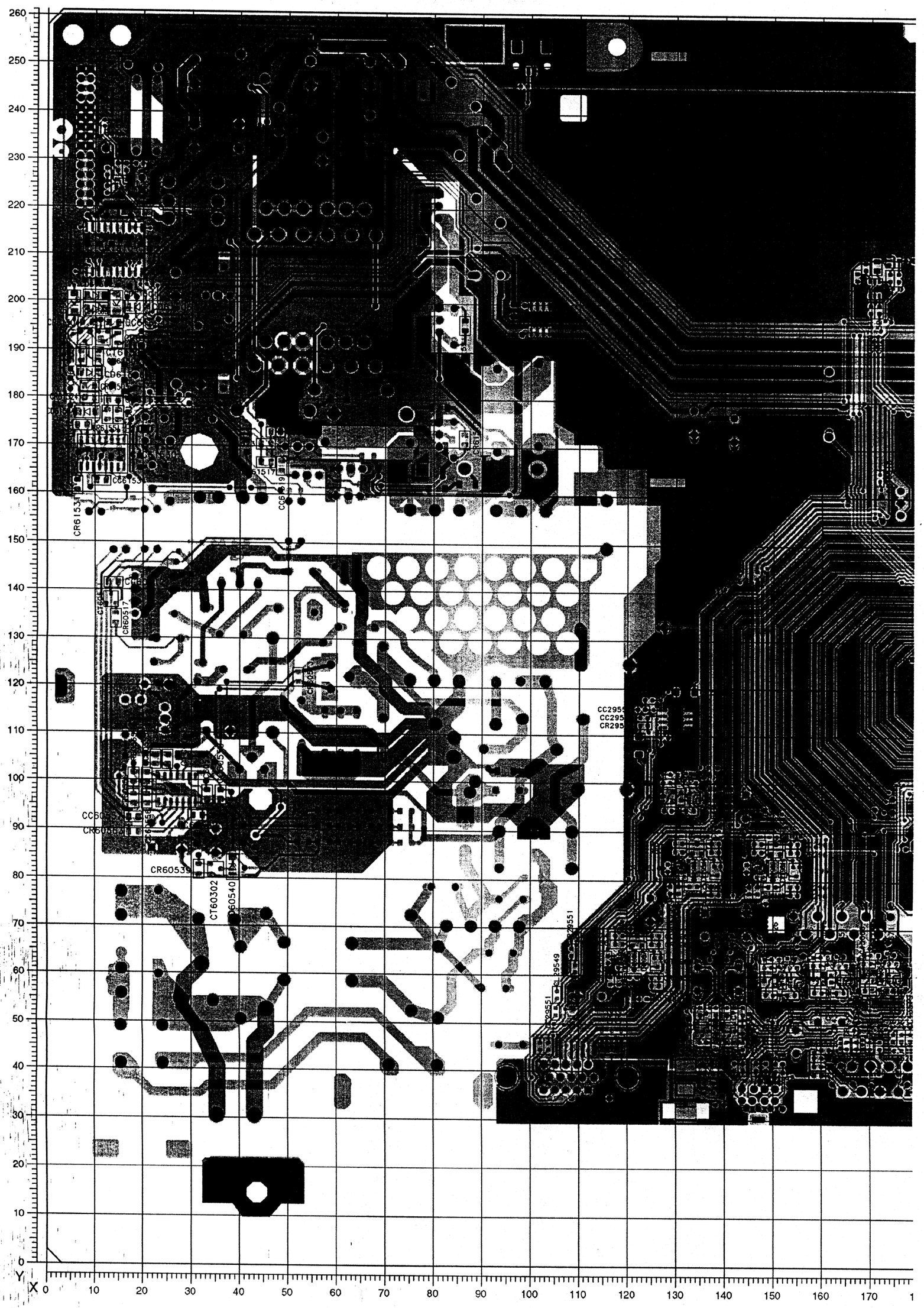

**Chassisplatte, NF-Platte / Chassis Board, AF Board**

Bestückungsseite, Ansicht von oben / Component Side, Top View

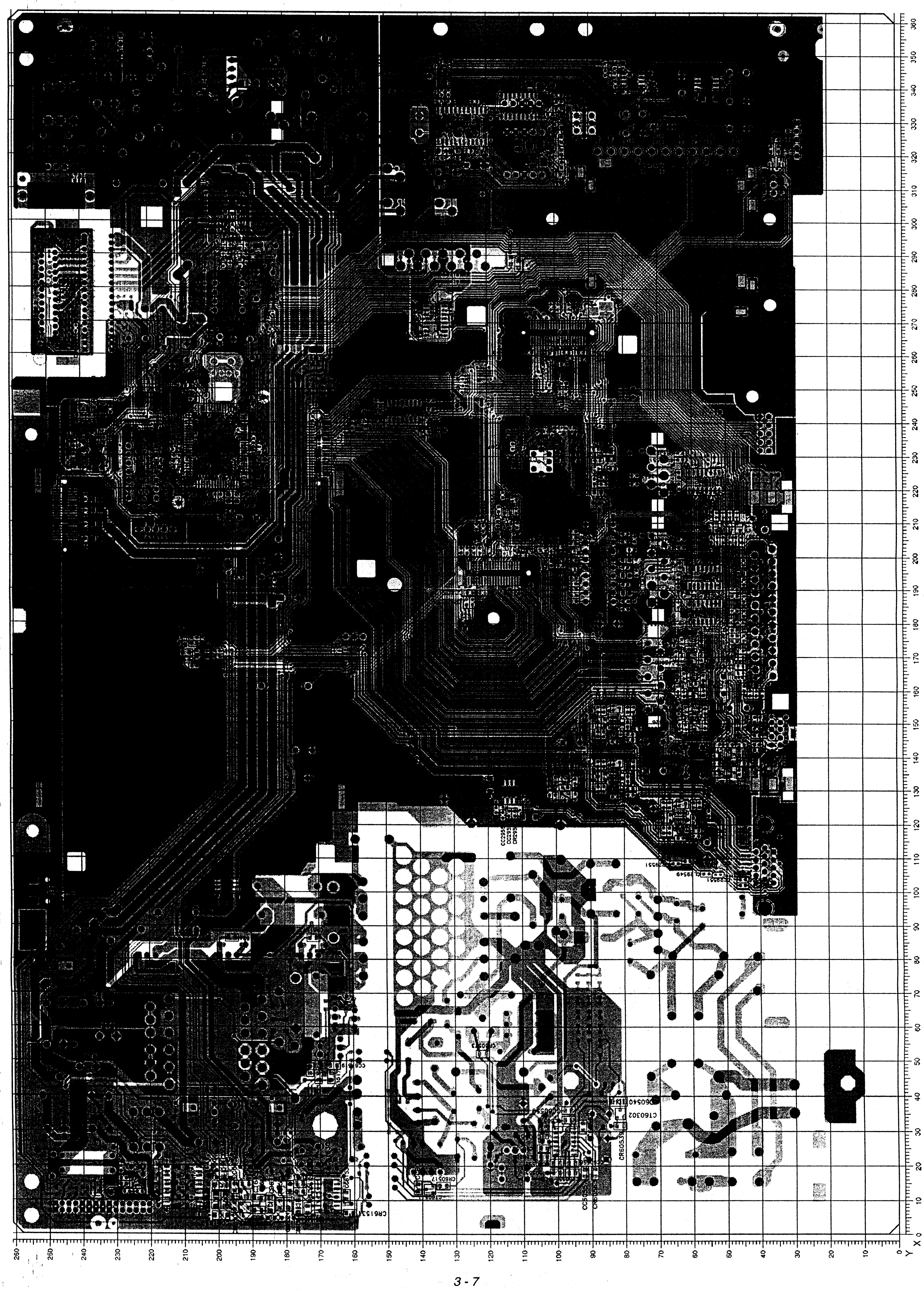

**Chassisplatte, NF-Platte / Chassis Board, AF Board** (vergrößert / enlarged)

Bestückungsseite, Ansicht von oben / Component Side, Top View

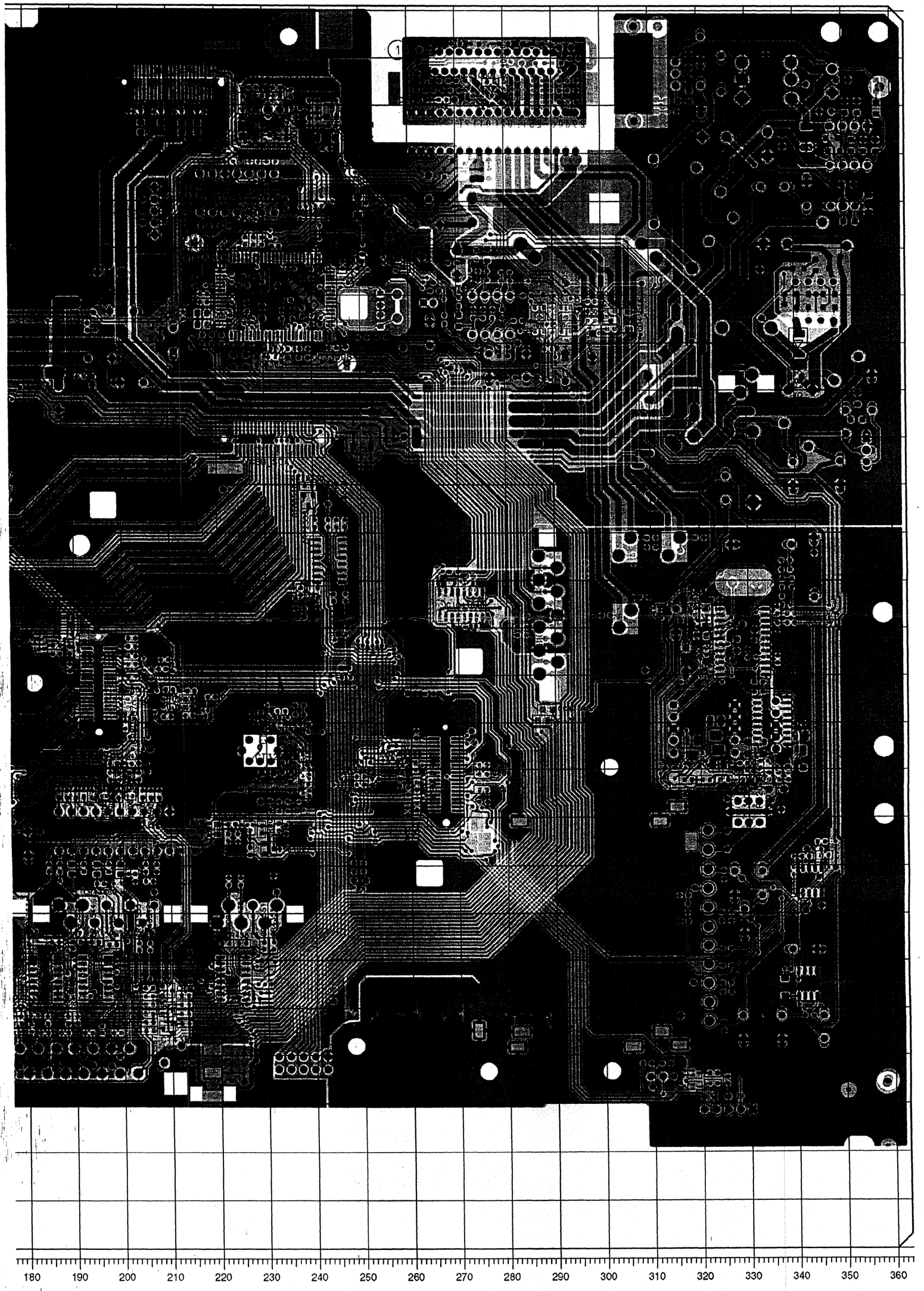

## Chassisplatte, NF-Platte / Chassis Board, AF Board

Koordinaten für die SMD-Bauteile auf der Lötseite / Coordiantes of the SMD components on the Solder Side

| POS. | X | Y |
|---|---|---|
| CC29501 | 138 | 42 |
| CC29505 | 139 | 45 |
| CC29517 | 132 | 47 |
| CC29519 | 133 | 50 |
| CC29523 | 139 | 33 |
| CC29531 | 137 | 38 |
| CC29535 | 141 | 45 |
| CC29602 | 153 | 81 |
| CC29604 | 151 | 83 |
| CC29614 | 148 | 89 |
| CC29627 | 115 | 44 |
| CC29628 | 119 | 44 |
| CC29629 | 117 | 48 |
| CC29630 | 119 | 48 |
| CC29632 | 136 | 81 |
| CC29634 | 135 | 83 |
| CC29635 | 131 | 73 |
| CC29646 | 132 | 89 |
| CC29662 | 124 | 61 |
| CC29664 | 123 | 64 |
| CC29676 | 120 | 70 |
| CC29732 | 11 | 245 |
| CC29734 | 11 | 242 |
| CC29736 | 13 | 236 |
| CC31001 | 324 | 69 |
| CC31003 | 326 | 69 |
| CC31007 | 325 | 78 |
| CC32001 | 315 | 132 |
| CC32019 | 317 | 96 |
| CC32022 | 340 | 110 |
| CC32029 | 316 | 74 |
| CC32031 | 324 | 46 |
| CC32032 | 319 | 133 |
| CC32042 | 326 | 123 |
| CC32043 | 328 | 126 |
| CC32044 | 330 | 125 |
| CC32046 | 332 | 127 |
| CC32069 | 323 | 136 |
| CC32073 | 231 | 93 |
| CC32076 | 234 | 100 |
| CC32077 | 234 | 102 |
| CC32078 | 235 | 104 |
| CC32079 | 237 | 103 |
| CC32095 | 337 | 140 |
| CC32096 | 338 | 142 |
| CC32097 | 338 | 144 |
| CC32098 | 339 | 140 |
| CC33012 | 234 | 206 |
| CC33018 | 225 | 208 |
| CC33019 | 230 | 191 |
| CC33020 | 233 | 191 |
| CC33021 | 236 | 196 |
| CC33022 | 230 | 204 |
| CC33023 | 228 | 191 |
| CC33024 | 227 | 198 |
| CC33026 | 225 | 185 |
| CC33027 | 225 | 188 |
| CC33031 | 234 | 196 |
| CC33032 | 238 | 189 |
| CC33033 | 218 | 198 |
| CC33034 | 218 | 195 |
| CC33040 | 230 | 196 |
| CC33041 | 255 | 191 |
| CC33042 | 239 | 191 |
| CC33043 | 241 | 194 |
| CC33044 | 238 | 197 |
| CC33047 | 254 | 195 |
| CC33048 | 254 | 199 |
| CC33071 | 221 | 208 |
| CC33072 | 218 | 211 |
| CC33073 | 221 | 210 |
| CC33074 | 231 | 222 |

| POS. | X | Y |
|---|---|---|
| CC33081 | 227 | 204 |
| CC33082 | 216 | 211 |
| CC33084 | 221 | 202 |
| CC33086 | 217 | 222 |
| CC33101 | 215 | 208 |
| CC33102 | 223 | 228 |
| CC33103 | 215 | 222 |
| CC33104 | 215 | 218 |
| CC33106 | 225 | 221 |
| CC40505 | 170 | 39 |
| CC40561 | 306 | 145 |
| CC40562 | 310 | 149 |
| CC40563 | 320 | 149 |
| CC40564 | 310 | 147 |
| CC40565 | 301 | 133 |
| CC40566 | 309 | 137 |
| CC40799 | 263 | 241 |
| CC40800 | 276 | 245 |
| CC40802 | 265 | 251 |
| CC40803 | 277 | 249 |
| CC40804 | 293 | 252 |
| CC40805 | 280 | 245 |
| CC40809 | 274 | 253 |
| CC40810 | 281 | 249 |
| CC40811 | 287 | 253 |
| CC40812 | 270 | 253 |
| CC40813 | 280 | 253 |
| CC40814 | 283 | 242 |
| CC40821 | 267 | 243 |
| CC40822 | 291 | 249 |
| CC40823 | 268 | 245 |
| CC40824 | 291 | 241 |
| CC40825 | 291 | 243 |
| CC40826 | 291 | 245 |
| CC40831 | 270 | 243 |
| CC40832 | 288 | 249 |
| CC40833 | 271 | 245 |
| CC40834 | 287 | 241 |
| CC40835 | 287 | 243 |
| CC40836 | 287 | 245 |
| CC41521 | 271 | 202 |
| CC41522 | 271 | 195 |
| CC41523 | 276 | 196 |
| CC41524 | 273 | 205 |
| CC41525 | 277 | 209 |
| CC41526 | 276 | 205 |
| CC41535 | 280 | 187 |
| CC41538 | 280 | 203 |
| CC41540 | 266 | 137 |
| CC41542 | 273 | 137 |
| CC41545 | 265 | 134 |
| CC41547 | 274 | 133 |
| CC41561 | 222 | 43 |
| CC41562 | 222 | 39 |
| CC41563 | 222 | 36 |
| CC41564 | 213 | 39 |
| CC43508 | 200 | 60 |
| CC43510 | 214 | 55 |
| CC43514 | 214 | 61 |
| CC43524 | 186 | 64 |
| CC43544 | 186 | 60 |
| CC43546 | 191 | 58 |
| CC43577 | 214 | 83 |
| CC43602 | 202 | 102 |
| CC43612 | 253 | 184 |
| CC43613 | 249 | 185 |
| CC43614 | 152 | 39 |
| CC43622 | 150 | 57 |
| CC43632 | 147 | 61 |
| CC43642 | 160 | 58 |
| CC43662 | 171 | 59 |
| CC43682 | 129 | 95 |

| POS. | X | Y |
|---|---|---|
| CC43690 | 137 | 102 |
| CC60505 | 101 | 81 |
| CC60578 | 95 | 103 |
| CC60582 | 23 | 119 |
| CC61411 | 78 | 223 |
| CC61503 | 18 | 158 |
| CC61509 | 85 | 172 |
| CC61510 | 81 | 179 |
| CC61511 | 90 | 171 |
| CC61512 | 81 | 162 |
| CC61513 | 87 | 163 |
| CC61514 | 60 | 180 |
| CC61515 | 60 | 184 |
| CC61516 | 66 | 182 |
| CC61517 | 71 | 187 |
| CC61520 | 70 | 236 |
| CC61521 | 60 | 233 |
| CC61522 | 13 | 170 |
| CC61524 | 51 | 238 |
| CC61533 | 12 | 163 |
| CC61541 | 10 | 184 |
| CC61544 | 11 | 191 |
| CC61545 | 9 | 177 |
| CC61546 | 13 | 179 |
| CC61606 | 96 | 199 |
| CC61801 | 21 | 218 |
| CC61803 | 15 | 217 |
| CC61804 | 12 | 217 |
| CC61809 | 23 | 215 |
| CC61815 | 34 | 212 |
| CC61817 | 9 | 214 |
| CC61819 | 17 | 211 |
| CC61821 | 19 | 211 |
| CC61823 | 349 | 208 |
| CC61824 | 349 | 206 |
| CC61827 | 342 | 200 |
| CC61829 | 342 | 198 |
| CC61834 | 340 | 183 |
| CC61835 | 347 | 198 |
| CC61837 | 341 | 206 |
| CC61841 | 319 | 247 |
| CC61843 | 319 | 252 |
| CC61901 | 338 | 233 |
| CC61902 | 344 | 231 |
| CC61904 | 351 | 240 |
| CC61906 | 353 | 240 |
| CC61908 | 355 | 232 |
| CC61909 | 348 | 233 |
| CC61912 | 350 | 246 |
| CC61916 | 351 | 224 |
| CC72550 | 241 | 136 |
| CC72561 | 237 | 134 |
| CC80503 | 198 | 117 |
| CC80504 | 198 | 111 |
| CC80506 | 243 | 53 |
| CC80508 | 201 | 110 |
| CC80513 | 202 | 122 |
| CC80523 | 275 | 101 |
| CC80524 | 275 | 95 |
| CC80526 | 275 | 93 |
| CC80529 | 275 | 99 |
| CC80533 | 261 | 93 |
| CC80541 | 264 | 99 |
| CC80542 | 232 | 88 |
| CC80545 | 312 | 38 |
| CC80547 | 207 | 119 |
| CC80549 | 261 | 100 |
| CC80550 | 264 | 116 |
| CC80554 | 258 | 100 |
| CC80557 | 257 | 106 |
| CC80559 | 259 | 105 |
| CC80561 | 254 | 103 |

| POS. | X | Y |
|---|---|---|
| CC80563 | 256 | 102 |
| CD29547 | 111 | 53 |
| CD29557 | 111 | 50 |
| CD32012 | 334 | 100 |
| CD32013 | 331 | 106 |
| CD32014 | 331 | 103 |
| CD32016 | 340 | 100 |
| CD32017 | 336 | 96 |
| CD43694 | 137 | 97 |
| CD43696 | 141 | 97 |
| CD60539 | 39 | 83 |
| CD60547 | 41 | 89 |
| CD60561 | 31 | 89 |
| CD60571 | 23 | 103 |
| CD60572 | 32 | 103 |
| CD60585 | 29 | 111 |
| CD61530 | 35 | 194 |
| CD80510 | 250 | 168 |
| CL29731 | 12 | 248 |
| CL31005 | 325 | 59 |
| CL31006 | 325 | 63 |
| CL33091 | 240 | 209 |
| CL33092 | 240 | 207 |
| CL60505 | 101 | 87 |
| CL60507 | 87 | 89 |
| CL60511 | 71 | 105 |
| CL60571 | 25 | 104 |
| CL61531 | 7 | 172 |
| CL70513 | 172 | 159 |
| CL72505 | 191 | 184 |
| CR29501 | 137 | 40 |
| CR29503 | 137 | 45 |
| CR29505 | 135 | 45 |
| CR29513 | 137 | 63 |
| CR29515 | 141 | 63 |
| CR29517 | 132 | 45 |
| CR29531 | 137 | 36 |
| CR29533 | 145 | 45 |
| CR29535 | 143 | 45 |
| CR29545 | 135 | 54 |
| CR29604 | 151 | 85 |
| CR29615 | 111 | 46 |
| CR29617 | 109 | 46 |
| CR29618 | 154 | 91 |
| CR29619 | 108 | 46 |
| CR29620 | 155 | 90 |
| CR29627 | 117 | 44 |
| CR29629 | 115 | 48 |
| CR29634 | 135 | 85 |
| CR29664 | 123 | 66 |
| CR29732 | 13 | 245 |
| CR29733 | 15 | 246 |
| CR29734 | 13 | 242 |
| CR29736 | 15 | 242 |
| CR29737 | 15 | 236 |
| CR31003 | 325 | 53 |
| CR31014 | 342 | 48 |
| CR31015 | 339 | 58 |
| CR32001 | 321 | 120 |
| CR32002 | 321 | 122 |
| CR32005 | 314 | 100 |
| CR32007 | 324 | 98 |
| CR32012 | 330 | 100 |
| CR32013 | 334 | 98 |
| CR32017 | 329 | 96 |
| CR32019 | 314 | 96 |
| CR32022 | 332 | 119 |
| CR32023 | 332 | 117 |
| CR32027 | 316 | 68 |
| CR32029 | 317 | 71 |

| POS. | X | Y |
|---|---|---|
| CR32032 | 320 | 129 |
| CR32033 | 319 | 135 |
| CR32042 | 324 | 126 |
| CR32046 | 333 | 125 |
| CR32060 | 238 | 110 |
| CR32061 | 323 | 131 |
| CR32062 | 226 | 96 |
| CR32064 | 237 | 114 |
| CR32065 | 322 | 129 |
| CR32066 | 237 | 112 |
| CR32067 | 228 | 112 |
| CR32068 | 228 | 110 |
| CR32069 | 323 | 134 |
| CR32071 | 233 | 113 |
| CR32072 | 237 | 97 |
| CR32073 | 233 | 93 |
| CR32075 | 230 | 99 |
| CR32076 | 234 | 109 |
| CR32077 | 234 | 107 |
| CR32086 | 235 | 97 |
| CR32087 | 233 | 91 |
| CR32094 | 338 | 133 |
| CR32095 | 337 | 136 |
| CR33001 | 244 | 190 |
| CR33002 | 259 | 205 |
| CR33004 | 265 | 215 |
| CR33005 | 228 | 209 |
| CR33006 | 208 | 193 |
| CR33008 | 256 | 170 |
| CR33009 | 256 | 172 |
| CR33013 | 239 | 204 |
| CR33023 | 225 | 191 |
| CR33024 | 223 | 191 |
| CR33031 | 235 | 188 |
| CR33032 | 238 | 187 |
| CR33033 | 215 | 190 |
| CR33034 | 217 | 191 |
| CR33035 | 229 | 186 |
| CR33036 | 231 | 186 |
| CR33041 | 251 | 191 |
| CR33044 | 235 | 199 |
| CR33051 | 233 | 187 |
| CR33052 | 243 | 186 |
| CR33053 | 219 | 191 |
| CR33054 | 221 | 191 |
| CR33071 | 221 | 206 |
| CR33072 | 218 | 207 |
| CR33073 | 227 | 221 |
| CR33074 | 229 | 221 |
| CR33075 | 233 | 221 |
| CR33076 | 235 | 220 |
| CR33081 | 226 | 202 |
| CR33082 | 221 | 204 |
| CR33083 | 221 | 221 |
| CR33086 | 222 | 215 |
| CR33087 | 219 | 221 |
| CR33088 | 218 | 215 |
| CR33094 | 249 | 208 |
| CR33096 | 266 | 201 |
| CR33101 | 216 | 203 |
| CR33102 | 214 | 211 |
| CR33104 | 223 | 222 |
| CR33106 | 232 | 228 |
| CR33107 | 228 | 228 |
| CR40505 | 226 | 237 |
| CR40506 | 159 | 42 |
| CR40510 | 229 | 236 |
| CR40512 | 268 | 226 |
| CR40513 | 276 | 227 |
| CR40514 | 272 | 227 |
| CR40554 | 246 | 237 |
| CR40556 | 246 | 234 |

| POS. | X | Y |
|---|---|---|
| CR40801 | 274 | 241 |
| CR40802 | 276 | 241 |
| CR40803 | 268 | 241 |
| CR40805 | 278 | 241 |
| CR40806 | 278 | 245 |
| CR40811 | 283 | 244 |
| CR40821 | 263 | 243 |
| CR40822 | 295 | 250 |
| CR40823 | 264 | 245 |
| CR40824 | 294 | 241 |
| CR40825 | 294 | 243 |
| CR40826 | 294 | 245 |
| CR41502 | 288 | 199 |
| CR41503 | 286 | 194 |
| CR41511 | 295 | 179 |
| CR41512 | 291 | 185 |
| CR41521 | 266 | 203 |
| CR41522 | 271 | 199 |
| CR41523 | 274 | 196 |
| CR41524 | 269 | 207 |
| CR41525 | 274 | 209 |
| CR41526 | 276 | 203 |
| CR41527 | 280 | 196 |
| CR41528 | 278 | 196 |
| CR41531 | 268 | 195 |
| CR41532 | 274 | 189 |
| CR41533 | 264 | 212 |
| CR41534 | 281 | 183 |
| CR41535 | 280 | 189 |
| CR41536 | 283 | 195 |
| CR41538 | 280 | 205 |
| CR41539 | 285 | 200 |
| CR41540 | 266 | 142 |
| CR41542 | 269 | 142 |
| CR41544 | 283 | 130 |
| CR41545 | 265 | 132 |
| CR41546 | 283 | 129 |
| CR41547 | 271 | 131 |
| CR41561 | 225 | 43 |
| CR41563 | 225 | 37 |
| CR43508 | 248 | 80 |
| CR43515 | 289 | 113 |
| CR43520 | 287 | 113 |
| CR43532 | 184 | 64 |
| CR43543 | 184 | 60 |
| CR43546 | 250 | 80 |
| CR43577 | 216 | 88 |
| CR43578 | 214 | 88 |
| CR43581 | 189 | 95 |
| CR43584 | 192 | 95 |
| CR43593 | 202 | 95 |
| CR43603 | 200 | 95 |
| CR43605 | 196 | 95 |
| CR43607 | 194 | 95 |
| CR43613 | 152 | 43 |
| CR43617 | 139 | 68 |
| CR43618 | 142 | 68 |
| CR43628 | 150 | 63 |
| CR43630 | 153 | 62 |
| CR43632 | 155 | 63 |
| CR43633 | 183 | 60 |
| CR43634 | 179 | 62 |
| CR43648 | 160 | 64 |
| CR43650 | 163 | 62 |
| CR43652 | 165 | 64 |
| CR43668 | 170 | 64 |
| CR43670 | 173 | 63 |
| CR43672 | 175 | 64 |
| CR43683 | 140 | 92 |
| CR43688 | 129 | 101 |
| CR43690 | 132 | 100 |
| CR43692 | 134 | 101 |

| POS. | X | Y |
|---|---|---|
| CR43693 | 138 | 104 |
| CR43694 | 137 | 93 |
| CR60511 | 39 | 146 |
| CR60512 | 41 | 149 |
| CR60513 | 38 | 150 |
| CR60514 | 33 | 150 |
| CR60515 | 30 | 149 |
| CR60520 | 53 | 88 |
| CR60521 | 57 | 88 |
| CR60523 | 62 | 88 |
| CR60525 | 66 | 88 |
| CR60527 | 70 | 88 |
| CR60529 | 74 | 88 |
| CR60530 | 74 | 91 |
| CR60531 | 70 | 91 |
| CR60532 | 62 | 91 |
| CR60535 | 66 | 91 |
| CR60536 | 74 | 94 |
| CR60537 | 70 | 94 |
| CR60540 | 43 | 85 |
| CR60545 | 66 | 94 |
| CR60549 | 57 | 91 |
| CR60553 | 62 | 94 |
| CR60557 | 16 | 104 |
| CR60559 | 57 | 94 |
| CR60561 | 27 | 88 |
| CR60562 | 19 | 93 |
| CR60571 | 29 | 101 |
| CR60572 | 29 | 105 |
| CR60574 | 35 | 103 |
| CR60616 | 30 | 145 |
| CR61512 | 66 | 162 |
| CR61520 | 48 | 168 |
| CR61522 | 66 | 168 |
| CR61523 | 15 | 166 |
| CR61530 | 42 | 202 |
| CR61532 | 27 | 197 |
| CR61533 | 8 | 163 |
| CR61534 | 44 | 169 |
| CR61535 | 7 | 167 |
| CR61541 | 11 | 187 |
| CR61542 | 8 | 187 |
| CR61543 | 7 | 180 |
| CR61544 | 10 | 180 |
| CR61545 | 14 | 191 |
| CR61546 | 12 | 176 |
| CR61547 | 14 | 176 |
| CR61548 | 16 | 182 |
| CR61549 | 16 | 188 |
| CR61550 | 16 | 192 |
| CR61601 | 41 | 170 |
| CR61602 | 51 | 161 |
| CR61603 | 25 | 165 |
| CR61604 | 19 | 167 |
| CR61605 | 23 | 171 |
| CR61801 | 25 | 233 |
| CR61802 | 27 | 238 |
| CR61809 | 17 | 217 |
| CR61813 | 17 | 206 |
| CR61814 | 11 | 211 |
| CR61815 | 13 | 211 |
| CR61817 | 8 | 211 |
| CR61821 | 12 | 207 |
| CR61822 | 8 | 206 |
| CR61823 | 16 | 203 |
| CR61827 | 347 | 200 |
| CR61835 | 338 | 197 |
| CR61836 | 338 | 202 |
| CR61837 | 345 | 207 |
| CR61841 | 319 | 242 |
| CR61842 | 315 | 241 |

| POS. | X | Y |
|---|---|---|
| CR61843 | 312 | 240 |
| CR61844 | 315 | 239 |
| CR61900 | 349 | 231 |
| CR61902 | 352 | 232 |
| CR61905 | 357 | 232 |
| CR61906 | 357 | 240 |
| CR61907 | 357 | 244 |
| CR61910 | 352 | 216 |
| CR61950 | 353 | 178 |
| CR61952 | 353 | 174 |
| CR70513 | 199 | 103 |
| CR70515 | 176 | 87 |
| CR72550 | 239 | 139 |
| CR72561 | 237 | 136 |
| CR80501 | 211 | 115 |
| CR80502 | 198 | 115 |
| CR80503 | 202 | 119 |
| CR80504 | 202 | 115 |
| CR80506 | 198 | 113 |
| CR80508 | 202 | 113 |
| CR80509 | 211 | 113 |
| CR80510 | 249 | 172 |
| CR80511 | 251 | 172 |
| CR80512 | 250 | 165 |
| CR80513 | 252 | 165 |
| CR80540 | 234 | 88 |
| CR80545 | 205 | 117 |
| CR80547 | 308 | 38 |
| CR80571 | 275 | 97 |
| CR90570 | 325 | 55 |
| CT32004 | 324 | 103 |
| CT32008 | 323 | 109 |
| CT32009 | 318 | 105 |
| CT32021 | 341 | 106 |
| CT61821 | 12 | 203 |

**Chassisplatte, NF-Platte / Chassis Board, AF Board**

Lötseite, Ansicht von unten / Solder Side, Bottom View

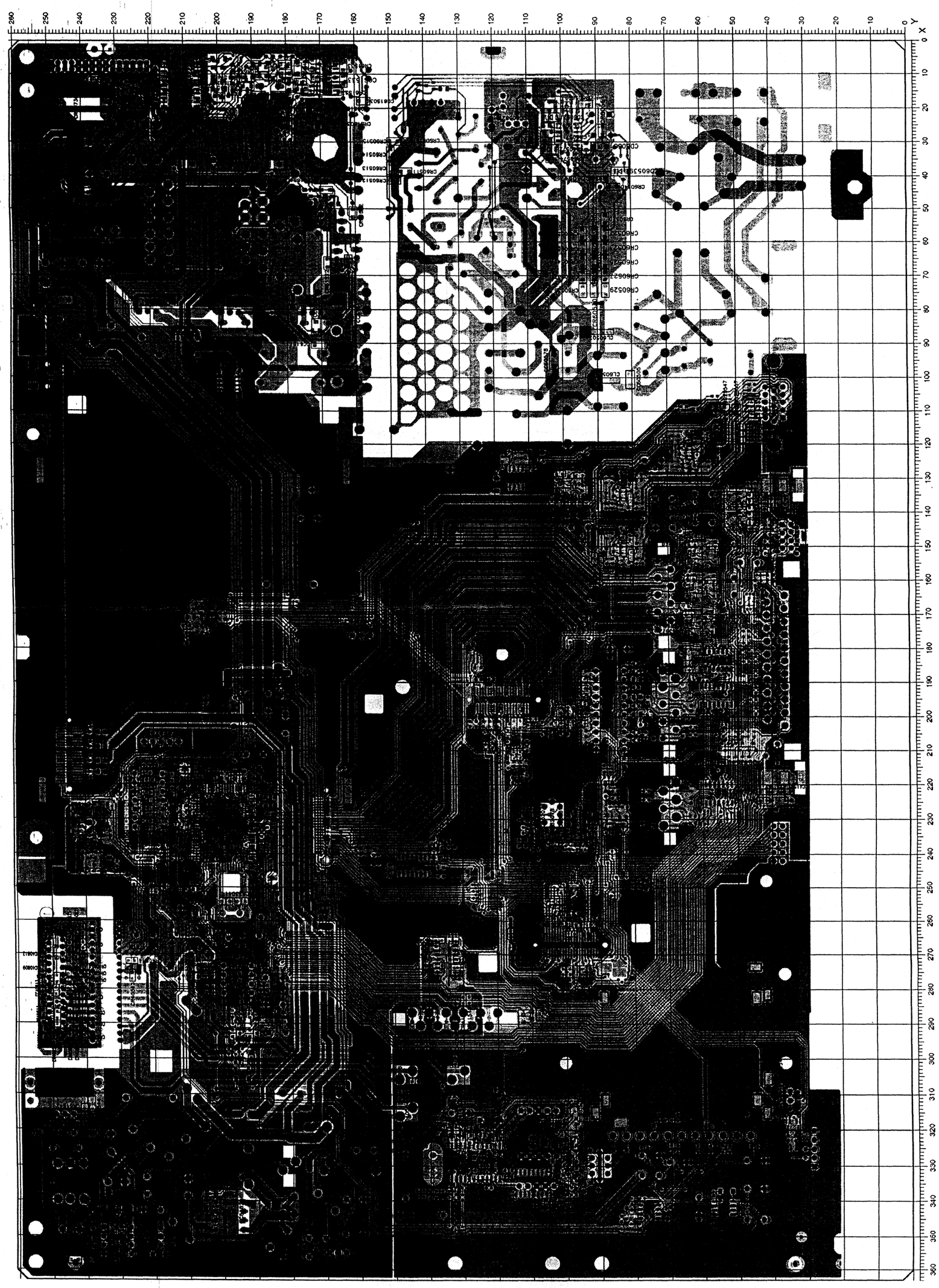

**Chassisplatte, NF-Platte / Chassis Board, AF Board** (vergrößert / enlarged)

Lötseite, Ansicht von unten / Solder Side, Bottom View

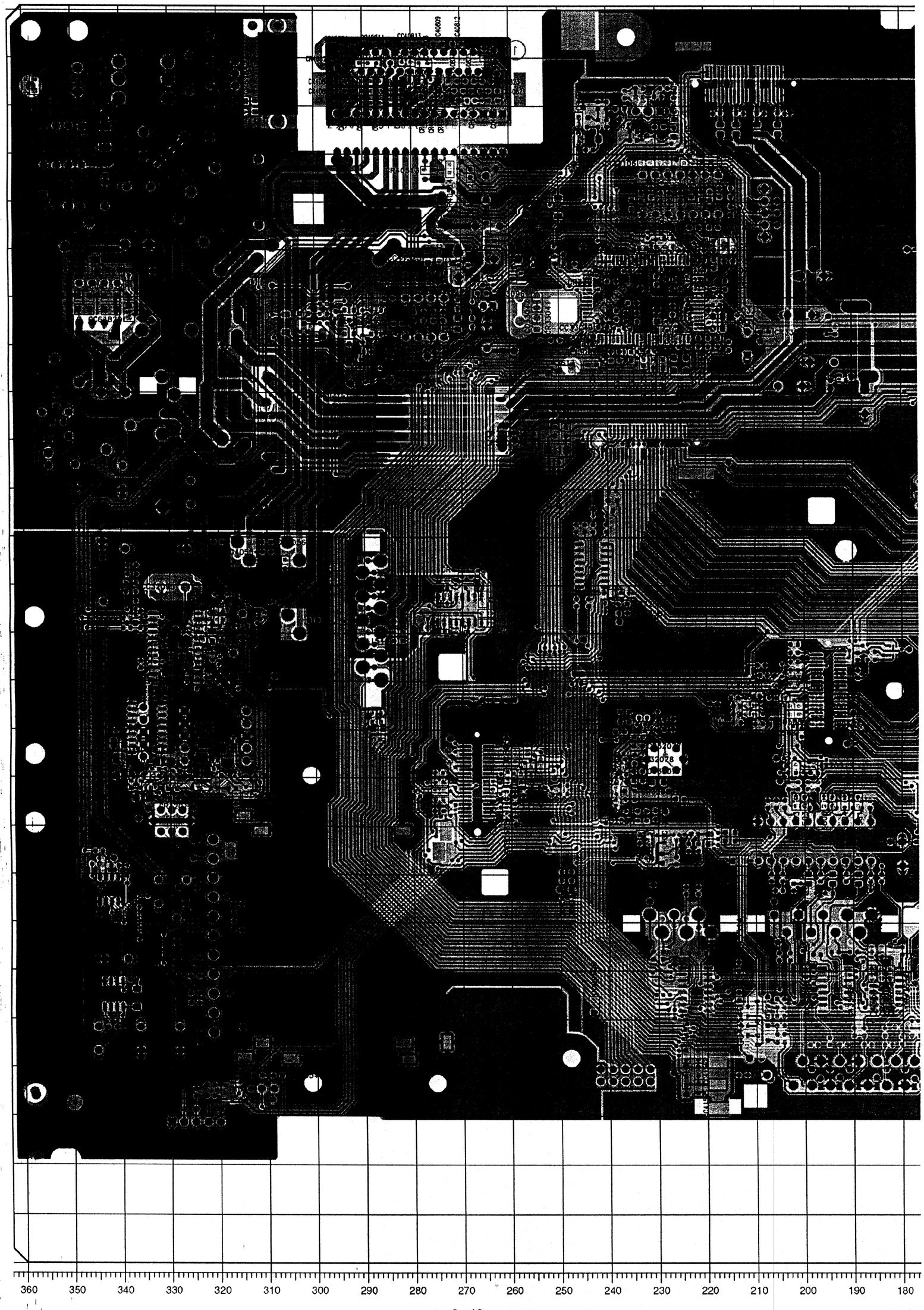

**Chassisplatte, NF-Platte / Chassis Board, AF Board** (vergrößert / enlarged)

Lötseite, Ansicht von unten / Solder Side, Bottom View

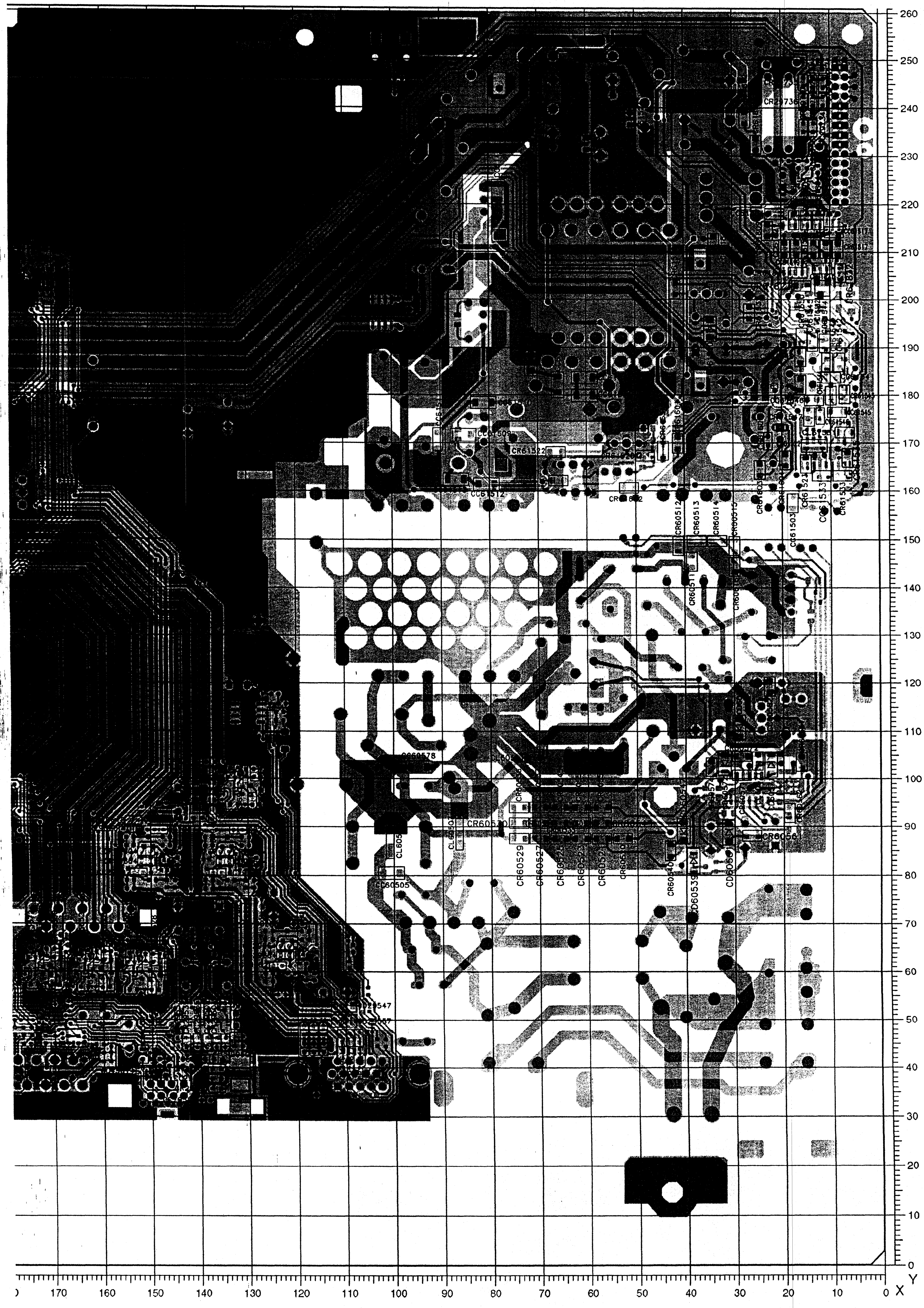

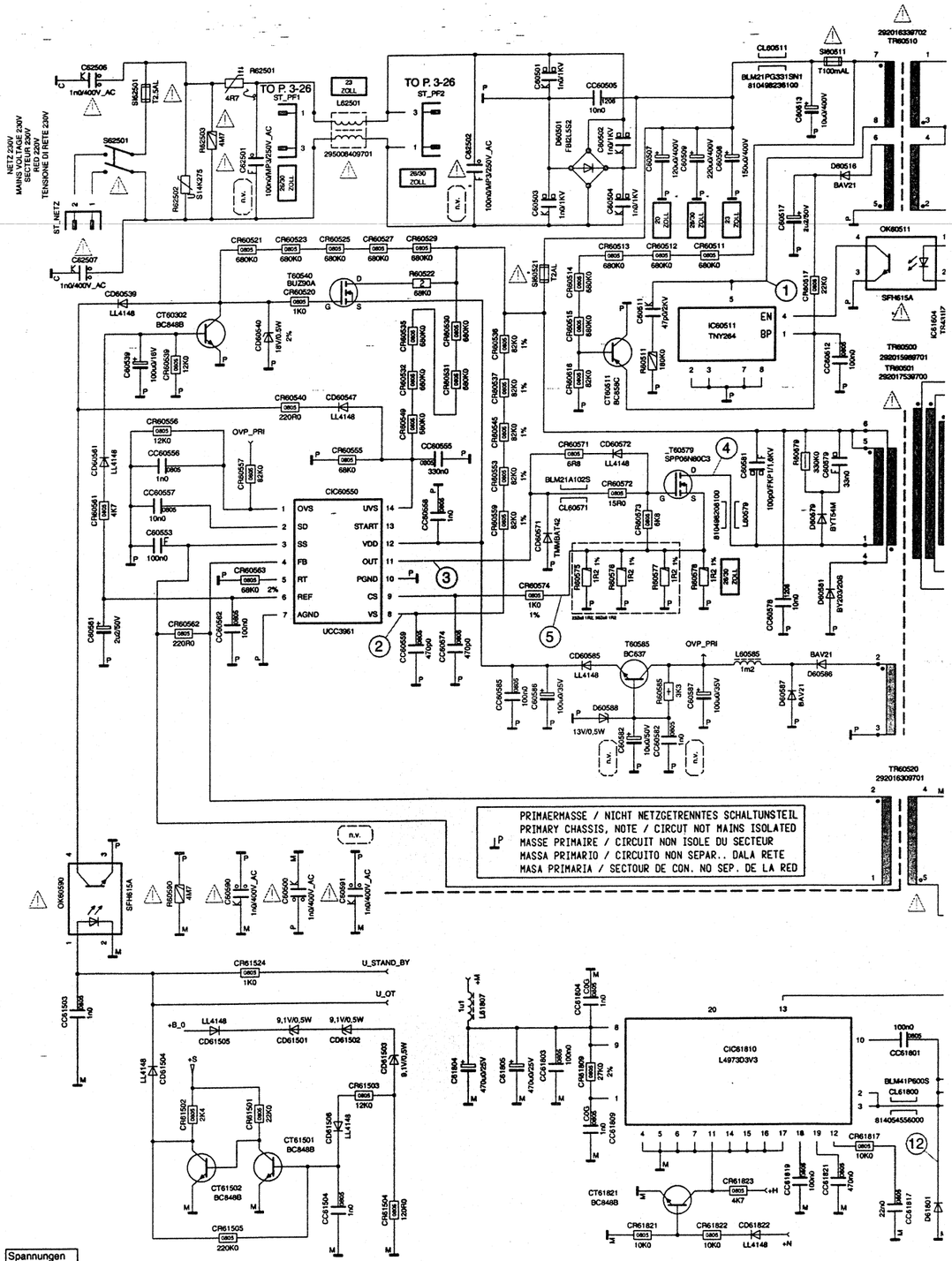

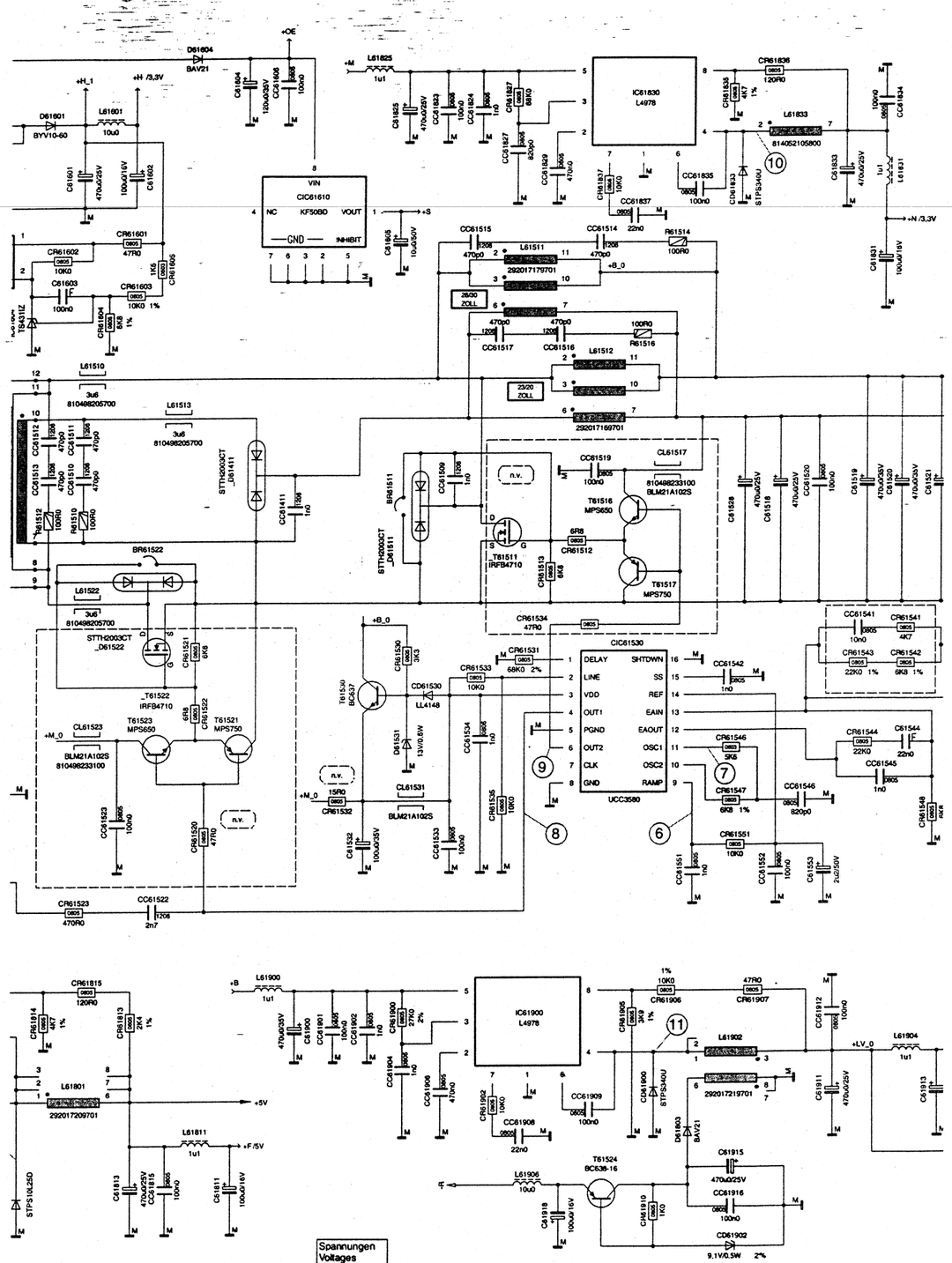

Chassisplatte – Netzteil / Chassis Board – Power Supply

NETZ 230V
MAINS VOLTAGE 230V
SECTEUR 230V
RED 230V
TENSIONE DI RETE 230V
ST_NETZ
TO P. 3-26
ST_PF1
TO P. 3-26
ST_PF2
IC60511
TNY264
CIC60550
UCC3961
T60540
BUZ90A
T60579
SPP06N80C3
T60585
BC637
OK60511
SFH615A
OK60590
SFH615A
TR60510
TR60500
TR60520
CIC61810
L4973D3V3
PRIMAERMASSE / NICHT NETZGETRENNTES SCHALTUNSTEIL
PRIMARY CHASSIS, NOTE / CIRCUT NOT MAINS ISOLATED
MASSE PRIMAIRE / CIRCUIT NON ISOLE DU SECTEUR
MASSA PRIMARIO / CIRCUITO NON SEPAR.. DALA RETE
MASA PRIMARIA / SECTOUR DE CON. NO SEP. DE LA RED
U_STAND_BY
U_OT
OVP_PRI

Spannungen Voltages	
+B	24V
+F	5V
+H	3.3V
+LVDS	12V
+M	13V
+N	3.3V
+OE	10.2V
+Q	8.3V
+S	5V
-R	-8V

Chassisplatte – Netzteil / Chassis Board – Power Supply

IC61830
L4978
CIC61610
KF50BD
CIC61530
UCC3580
IC61900
L4978
+LV_0
+5V
+F/5V
+N /3,3V
+OE

Spannungen Voltages	
+B	24V
+F	5V
+H	3.3V
+LVDS	12V
+M	13V
+N	3.3V
+OE	10.2V
+Q	8.3V
+S	5V
-R	-8V

## Chassisplatte – Netzteil / Chassis Board – Power Supply

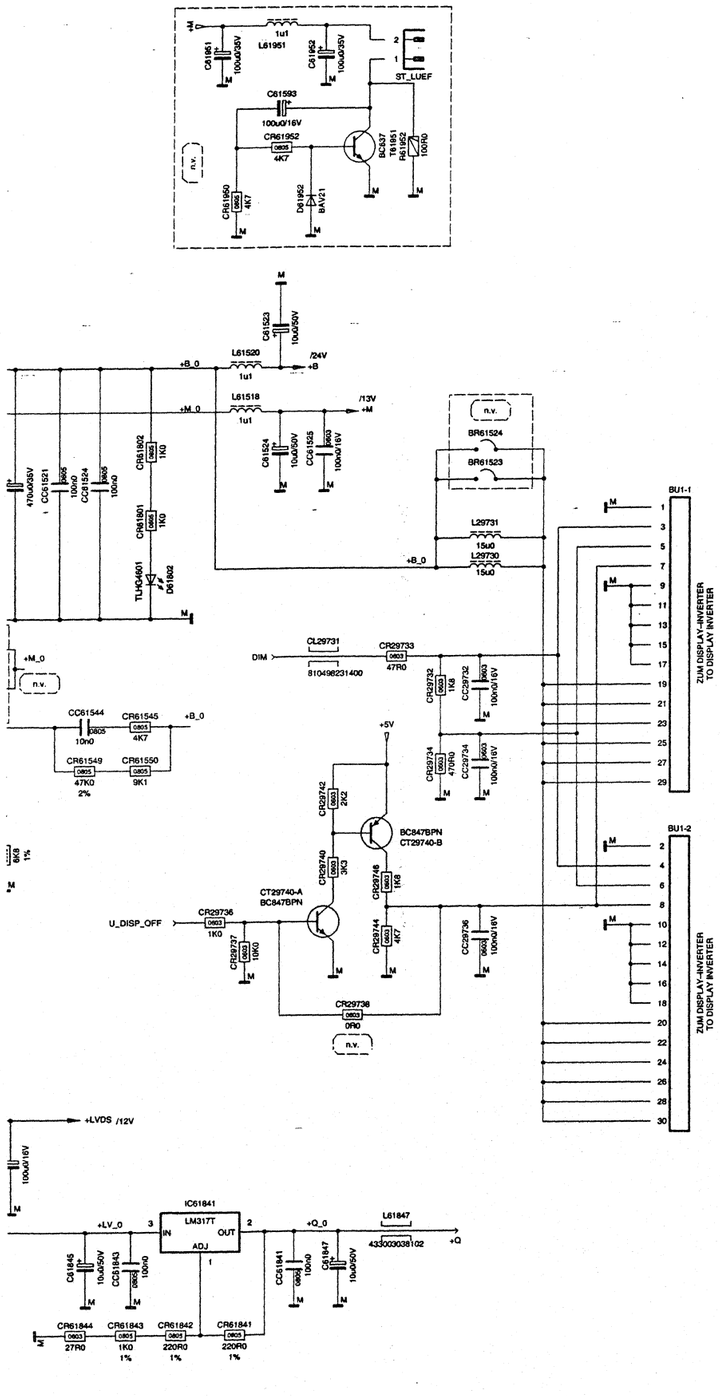


| Spannungen Voltages | |
|---|---|
| +B | 24V |
| +F | 5V |
| +H | 3.3V |
| +LVDS | 12V |
| +M | 13V |
| +N | 3.3V |
| +OE | 10.2V |
| +Q | 8.3V |
| +S | 5V |
| -R | -8V |

## Chassisplatte – Signalverarbeitung / Chassis Board – Signal Processing

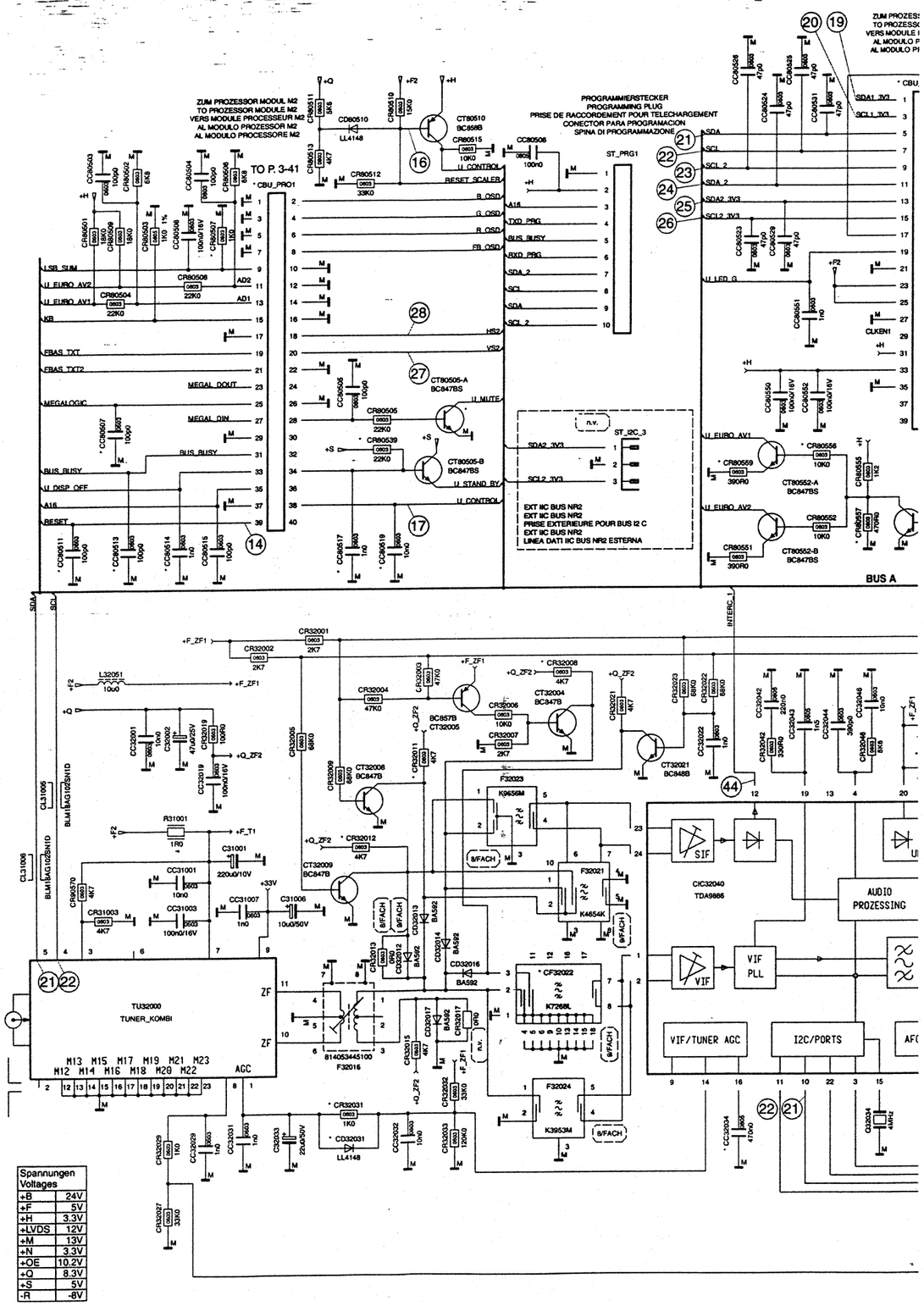






Chassisplatte – Signalverarbeitung / Chassis Board – Signal Processing

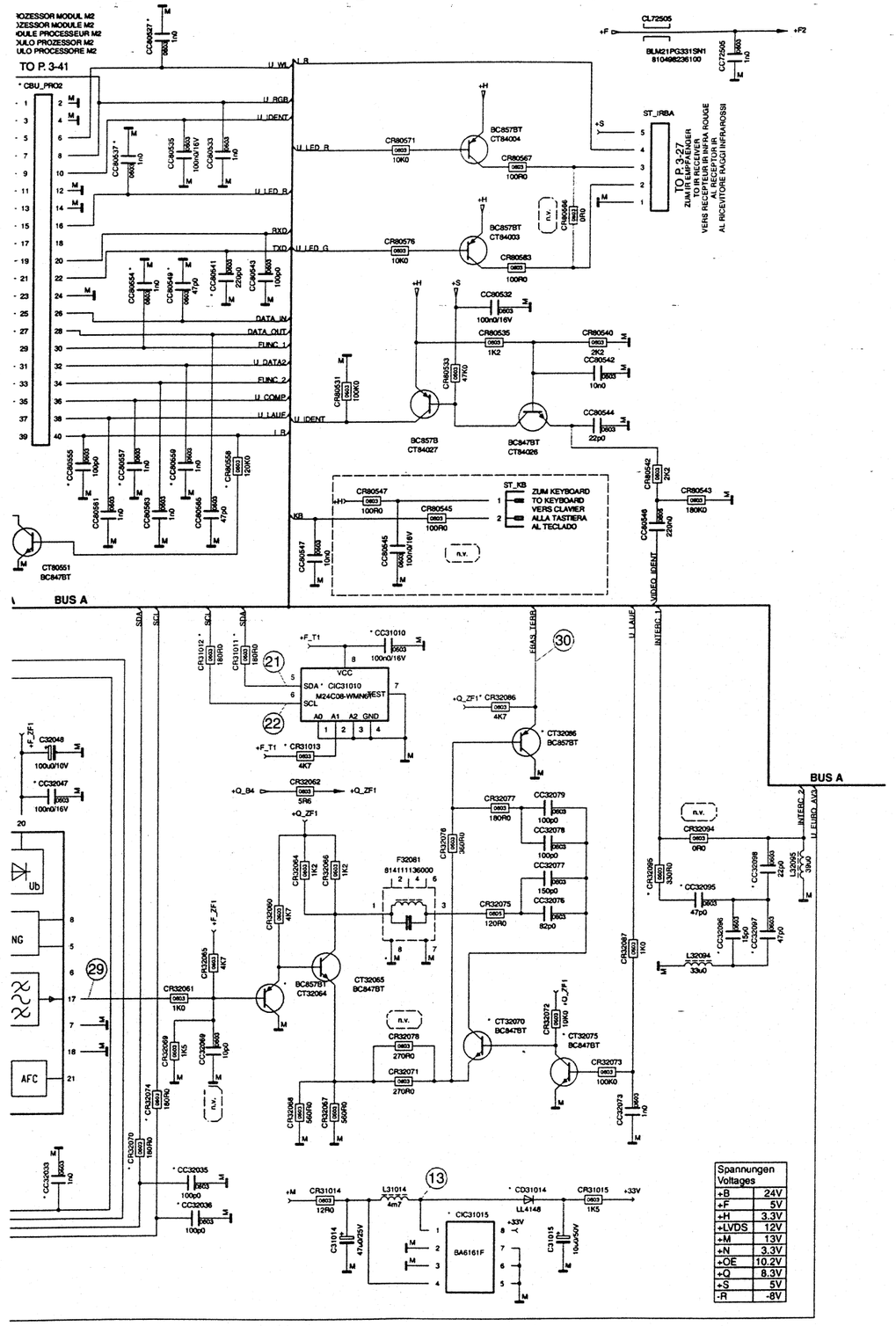

## Chassisplatte – Signalverarbeitung / Chassis Board – Signal Processing

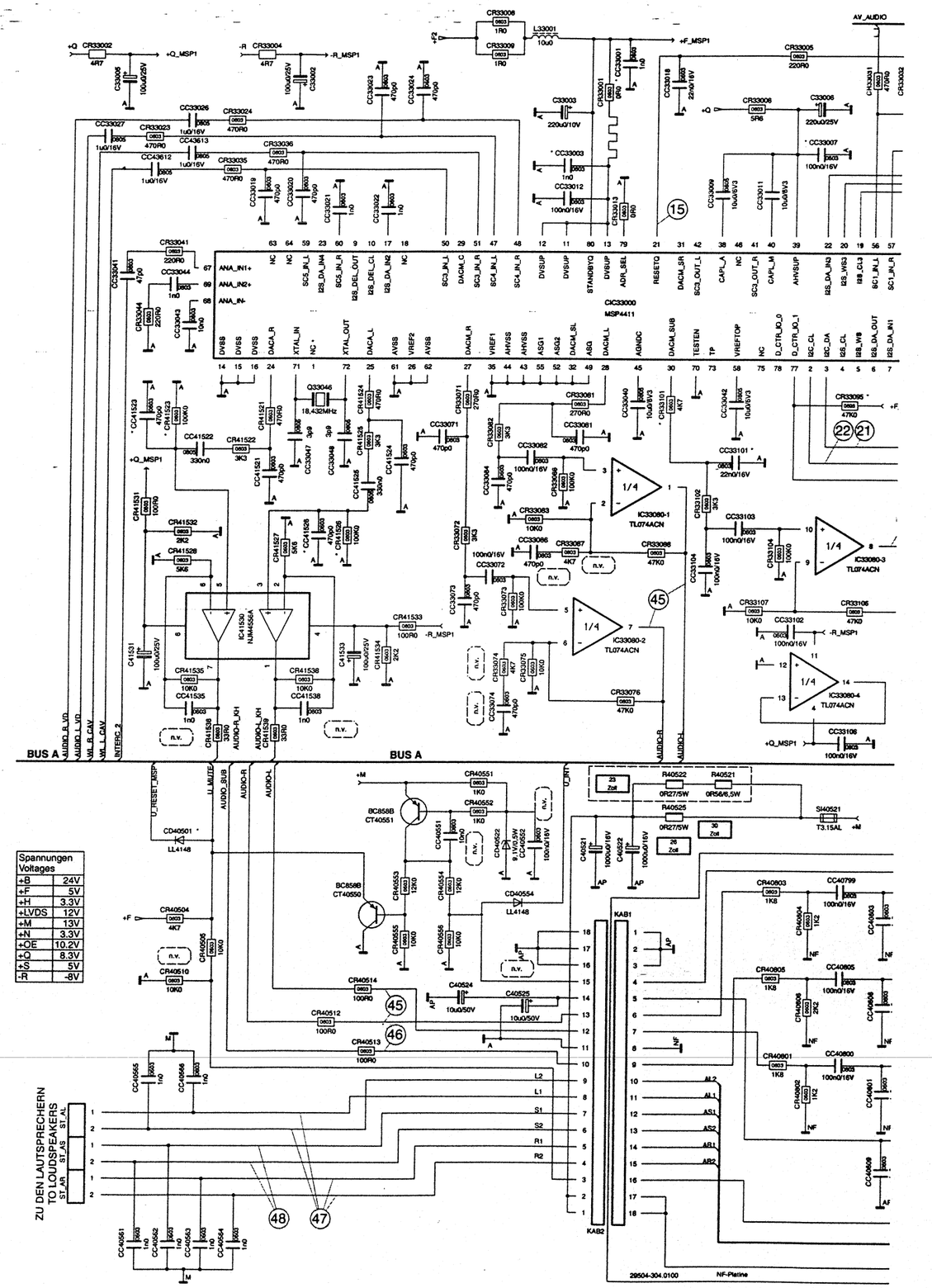


| Spannungen Voltages | |
|---|---|
| +B | 24V |
| +F | 5V |
| +H | 3.3V |
| +LVDS | 12V |
| +M | 13V |
| +N | 3.3V |
| +OE | 10.2V |
| +Q | 8.3V |
| +S | 5V |
| -R | -8V |





## Chassisplatte – Signalverarbeitung / Chassis Board – Signal Processing

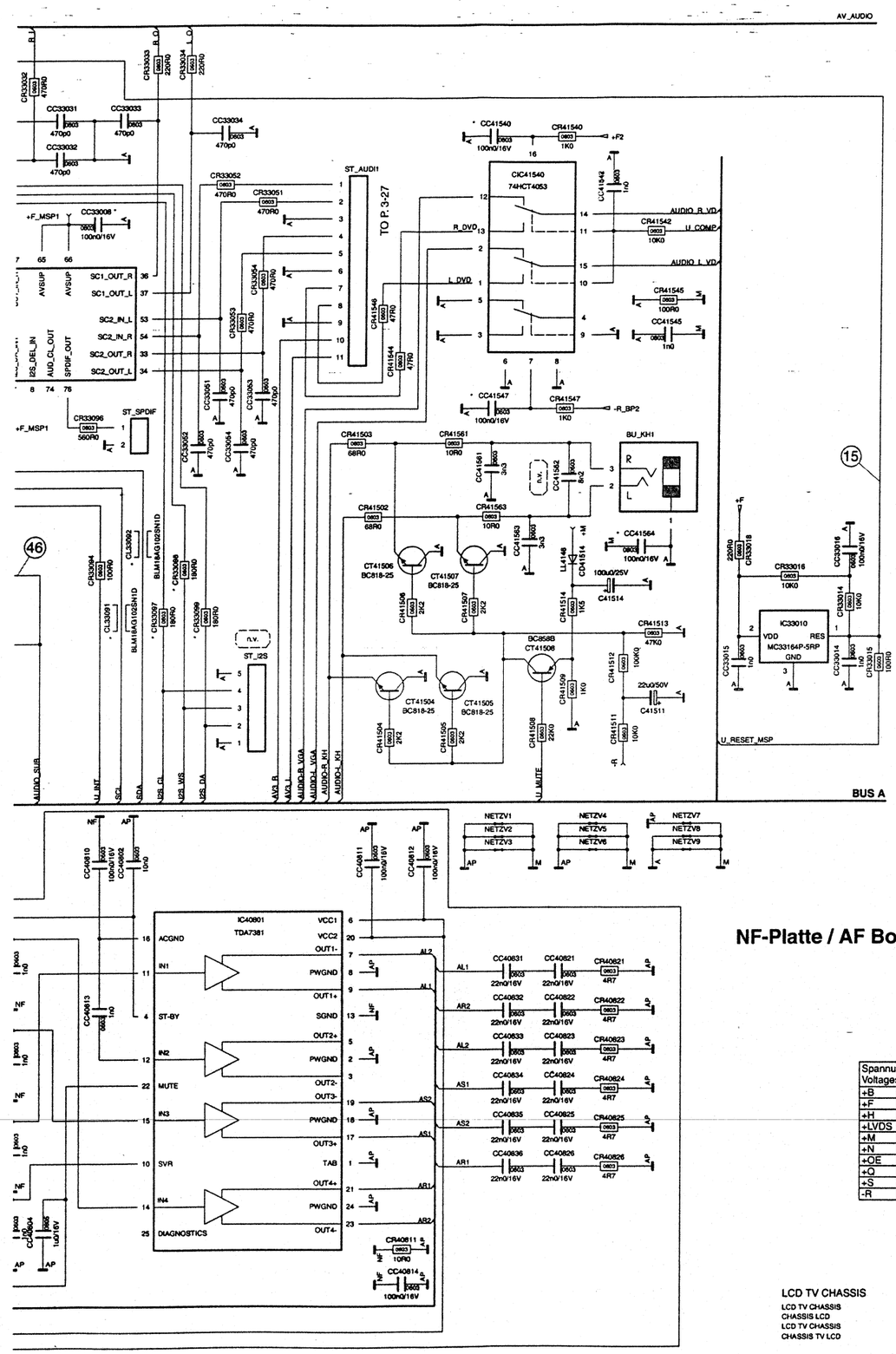


| Spannungen Voltages | |
|---|---|
| +B | 24V |
| +F | 5V |
| +H | 3.3V |
| +LVDS | 12V |
| +M | 13V |
| +N | 3.3V |
| +OE | 10.2V |
| +Q | 8.3V |
| +S | 5V |
| -R | -8V |

LCD TV CHASSIS

LCD TV CHASSIS
CHASSIS LCD
LCD TV CHASSIS
CHASSIS TV LCD

# Chassisplatte / Chassis Board – IN/OUT

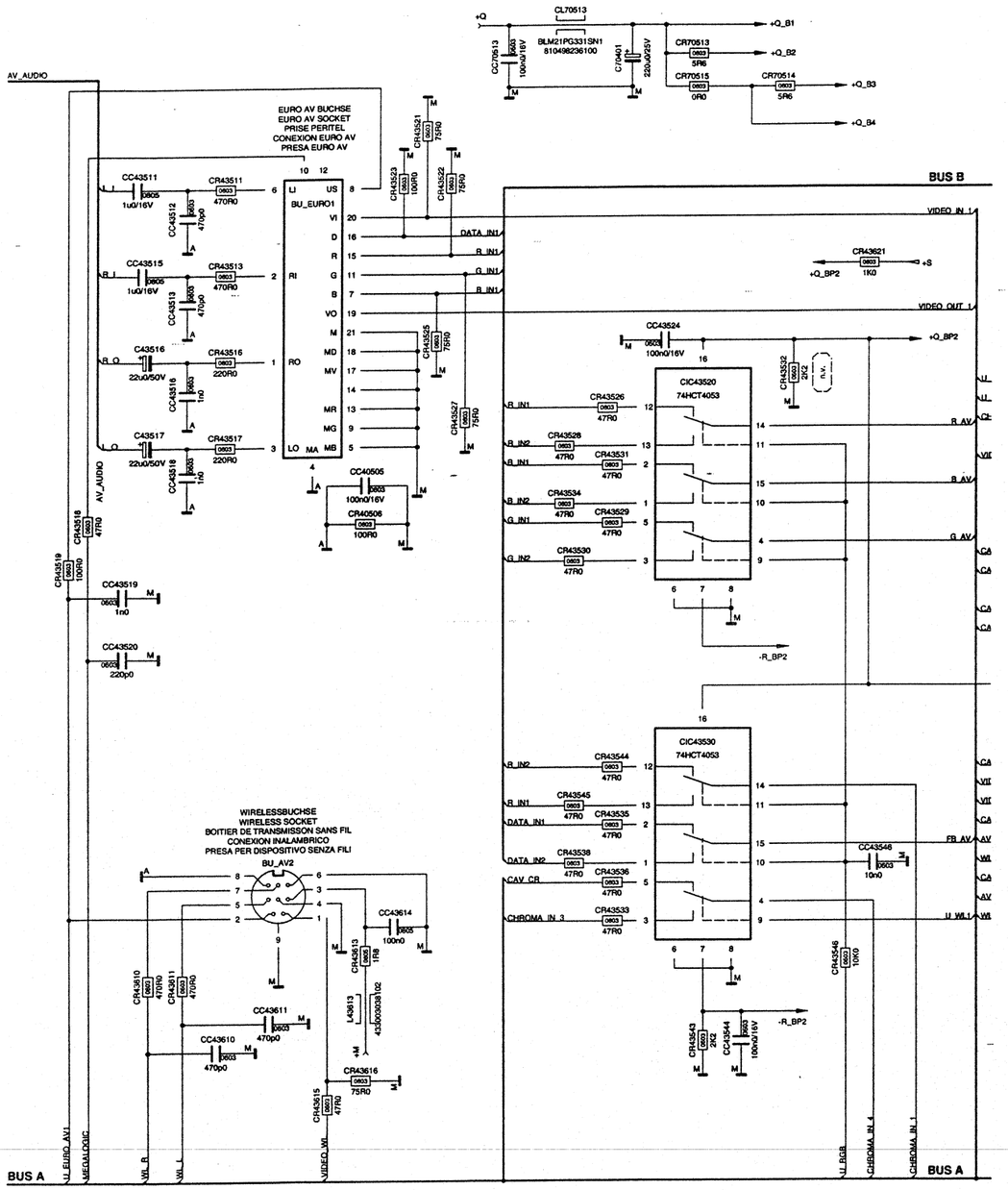


| Spannungen Voltages | |
|---|---|
| +B | 24V |
| +F | 5V |
| +H | 3.3V |
| +LVDS | 12V |
| +M | 13V |
| +N | 3.3V |
| +OE | 10.2V |
| +Q | 8.3V |
| +S | 5V |
| -R | -8V |





# Chassisplatte / Chassis Board – IN/OUT

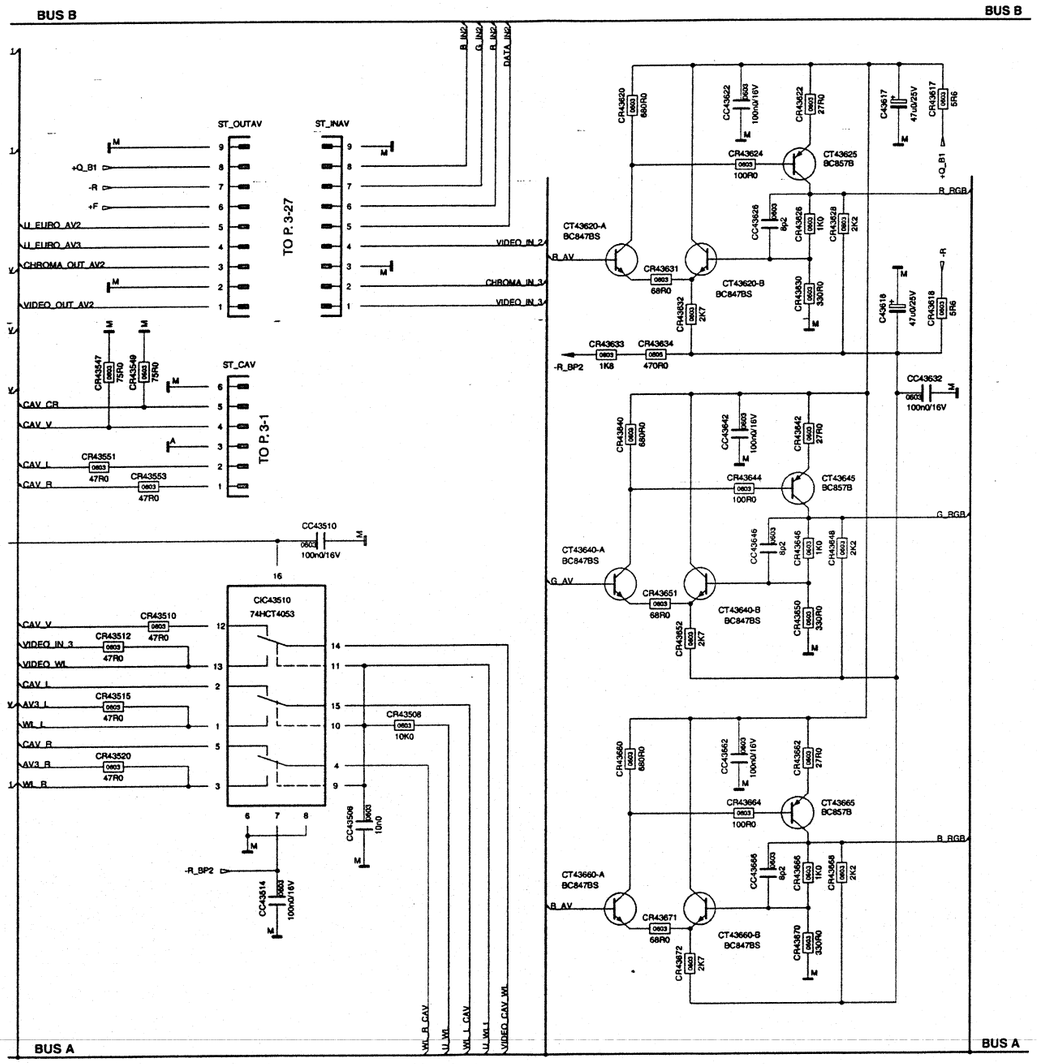


| Spannungen Voltages | |
|---|---|
| +B | 24V |
| +F | 5V |
| +H | 3.3V |
| +LVDS | 12V |
| +M | 13V |
| +N | 3.3V |
| +OE | 10.2V |
| +Q | 8.3V |
| +S | 5V |
| -R | -8V |

# Chassisplatte / Chassis Board – VGA

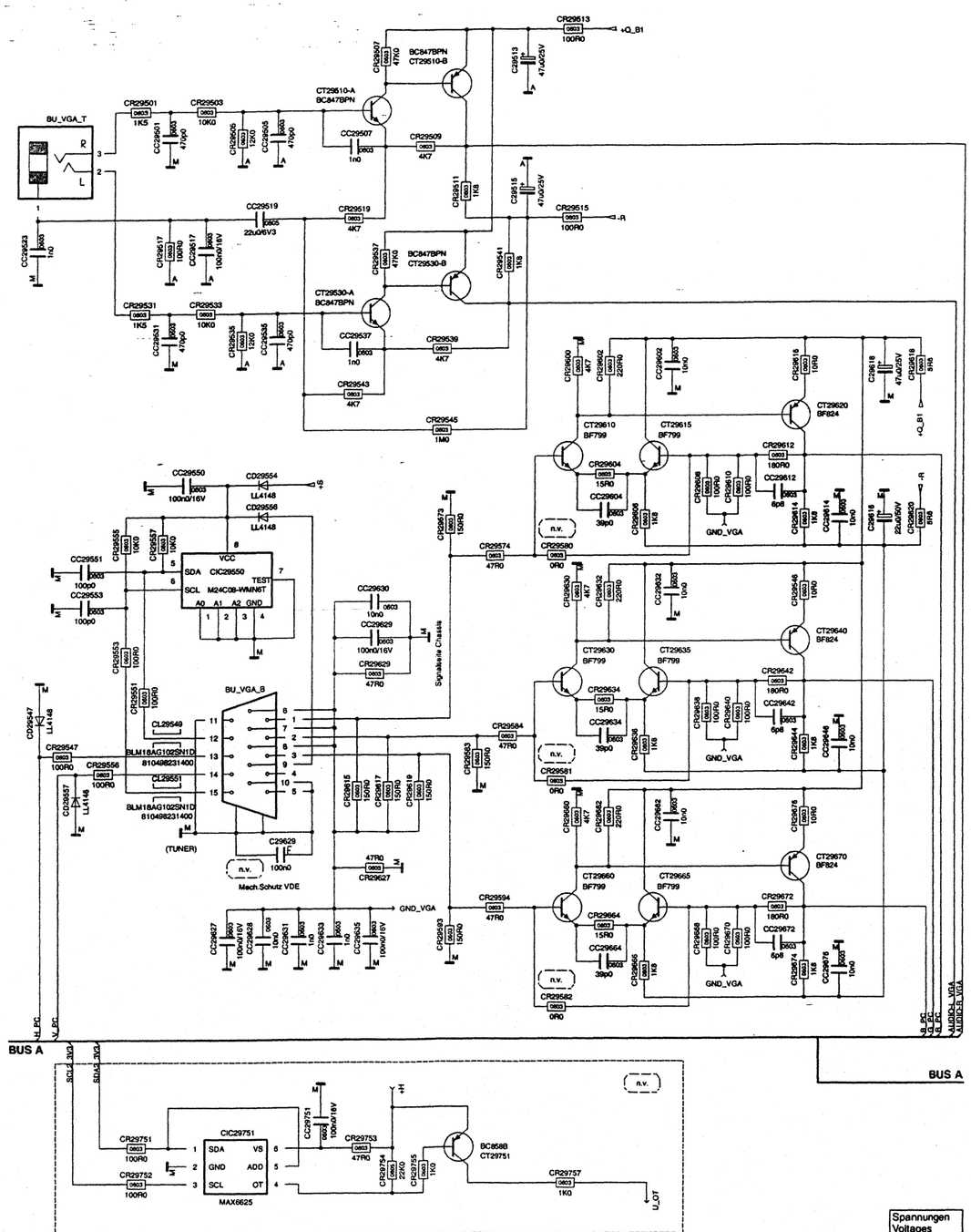


| Spannungen Voltages | |
|---|---|
| +B | 24V |
| +F | 5V |
| +H | 3.3V |
| +LVDS | 12V |
| +M | 13V |
| +N | 3.3V |
| +OE | 10.2V |
| +Q | 8.3V |
| +S | 5V |
| -R | -8V |





# Chassisplatte / Chassis Board – IN/OUT

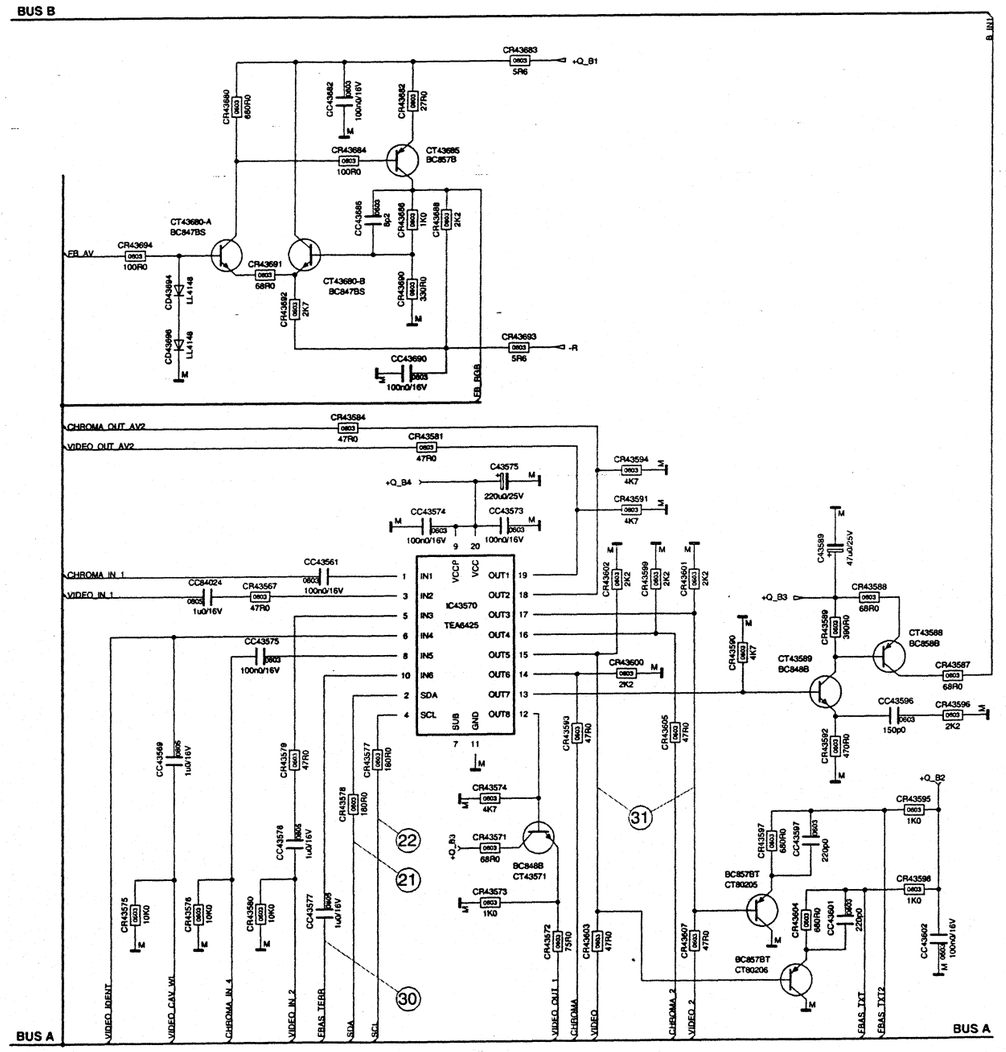


| Spannungen Voltages | |
|---|---|
| +B | 24V |
| +F | 5V |
| +H | 3.3V |
| +LVDS | 12V |
| +M | 13V |
| +N | 3.3V |
| +OE | 10.2V |
| +Q | 8.3V |
| +S | 5V |
| -R | -8V |

# Chassisplatte / Chassis Board – Scaler Interface

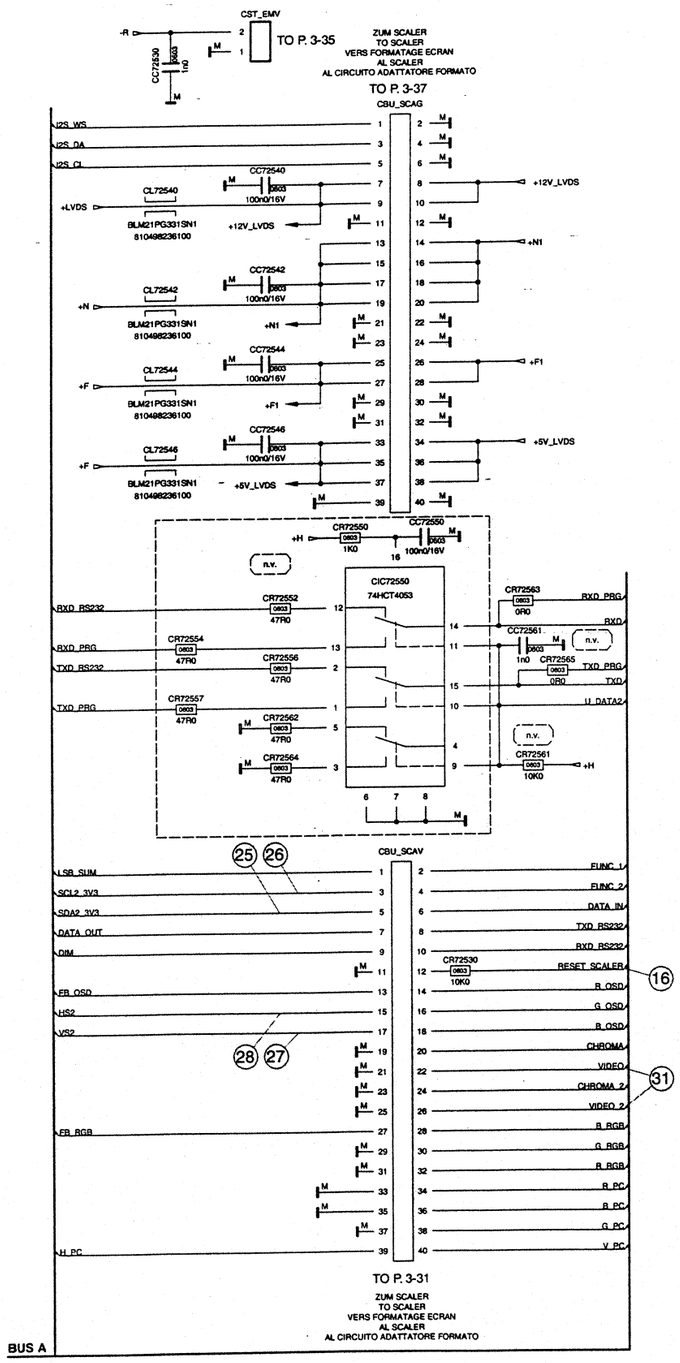


| Spannungen Voltages | |
|---|---|
| +B | 24V |
| +F | 5V |
| +H | 3.3V |
| +LVDS | 12V |
| +M | 13V |
| +N | 3.3V |
| +OE | 10.2V |
| +Q | 8.3V |
| +S | 5V |
| -R | -8V |





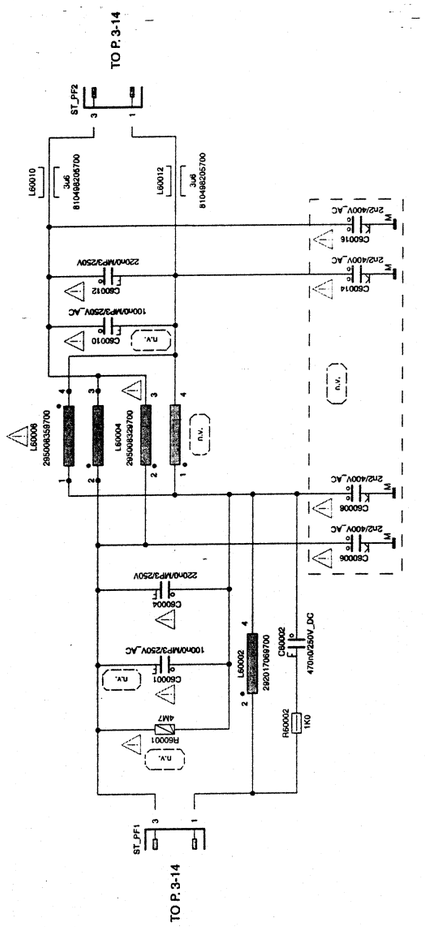


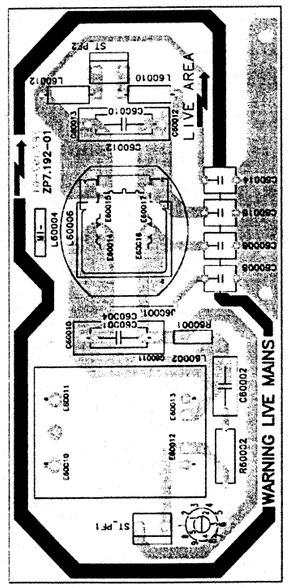


## PFC-Platte / PFC Board

Bestückungsseite, Ansicht von oben / Component Side, Top View

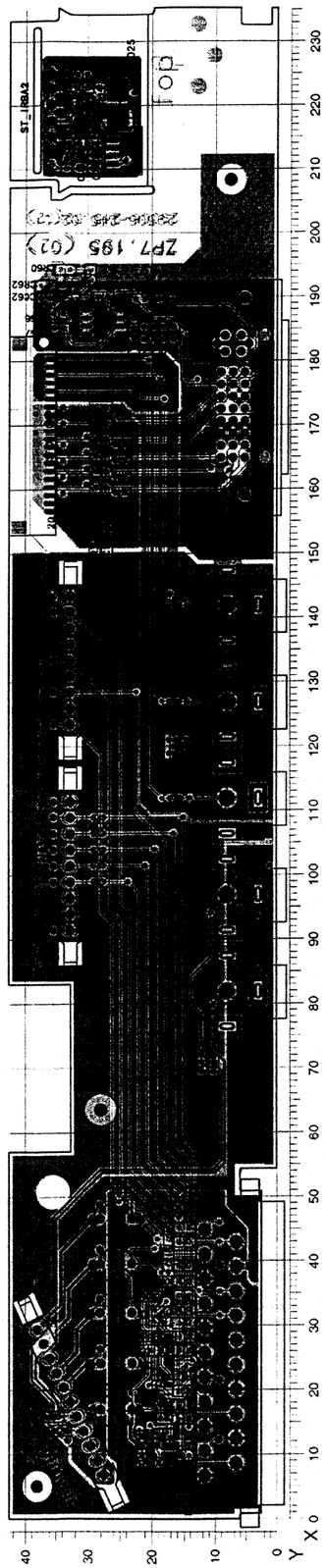

## AV-Platte / AV Board, IR/BA-Platte / Board

Bestückungsseite, Ansicht von oben / Component Side, Top View

| POS. | X | Y |
|---|---|---|
| BU_EURO_ | 45 | 9 |
| C1 | 40 | 26 |
| C2 | 47 | 26 |
| C3 | 32 | 26 |
| C4 | 24 | 26 |
| C5 | 17 | 21 |
| CC1 | 28 | 12 |
| CC2 | 37 | 15 |
| CC3 | 44 | 15 |
| CC4 | 48 | 13 |
| CC5 | 39 | 13 |
| CC6 | 70 | 8 |
| CC7 | 9 | 19 |
| CC8 | 70 | 10 |
| CC9 | 26 | 18 |
| CC10 | 151 | 24 |
| CC11 | 121 | 13 |
| CC12 | 51 | 13 |
| CC62 | 190 | 34 |
| CC63 | 190 | 25 |
| CC64 | 183 | 20 |
| CC65 | 186 | 20 |
| CC84021 | 211 | 27 |
| CC84023 | 211 | 29 |
| CD84025 | 220 | 21 |
| CIC63 | 186 | 25 |
| CIC84025 | 213 | 22 |
| CL1 | 142 | 14 |
| CL2 | 127 | 14 |
| CL3 | 112 | 14 |
| CL64 | 183 | 18 |
| CL65 | 185 | 18 |
| CR1 | 30 | 12 |
| CR2 | 37 | 12 |
| CR3 | 99 | 26 |
| CR4 | 51 | 23 |
| CR5 | 101 | 26 |
| CR6 | 104 | 26 |
| CR7 | 43 | 12 |
| CR8 | 106 | 26 |
| CR9 | 109 | 26 |
| CR10 | 51 | 21 |
| CR11 | 16 | 15 |
| CR12 | 45 | 12 |
| CR13 | 9 | 12 |
| CR14 | 16 | 12 |
| CR15 | 18 | 12 |
| CR16 | 26 | 12 |
| CR17 | 35 | 12 |
| CR18 | 26 | 12 |
| CR19 | 21 | 12 |
| CR20 | 21 | 12 |
| CR21 | 15 | 12 |
| CR22 | 12 | 12 |
| CR23 | 12 | 12 |
| CR24 | 12 | 12 |
| CR25 | 12 | 12 |
| CR26 | 12 | 12 |
| CR27 | 12 | 12 |
| CR28 | 15 | 12 |
| CR29 | 15 | 12 |
| CR30 | 12 | 12 |
| CR31 | 8 | 12 |
| CR32 | 19 | 12 |
| CR33 | 15 | 12 |
| CR34 | 33 | 12 |
| CR35 | 18 | 12 |
| CR36 | 10 | 12 |
| CR37 | 12 | 12 |
| CR38 | 22 | 12 |
| CR39 | 25 | 12 |
| CR40 | 22 | 12 |
| CR41 | 25 | 12 |
| CR42 | 22 | 12 |
| CR43 | 25 | 12 |
| CR44 | 22 | 12 |
| CR45 | 24 | 12 |
| CR46 | 11 | 12 |
| CR60 | 31 | 12 |
| CR61 | 22 | 12 |
| CR62 | 25 | 12 |
| CR63 | 22 | 12 |
| CR64 | 15 | 12 |
| CR65 | 22 | 12 |
| CR66 | 25 | 12 |
| CR67 | 22 | 12 |
| CR84021 | 24 | 12 |
| CR84022 | 30 | 12 |
| CR84023 | 28 | 12 |
| CR84024 | 27 | 12 |
| CR84026 | 34 | 12 |
| CR84027 | 19 | 12 |
| CST_DVI_ | 15 | 12 |
| CT1 | 16 | 12 |
| CT2 | 16 | 12 |
| CT3 | 16 | 12 |
| CT4 | 12 | 12 |
| CT62 | 30 | 12 |
| CT63 | 28 | 12 |
| CT84025 | 28 | 12 |
| ST_AUDIO | 36 | 12 |
| ST_COMP1112 | 6 | 12 |
| ST_COMP2127 | 5 | 12 |
| ST_COMP3142 | 6 | 12 |
| ST_COMPA | 6 | 12 |
| ST_COMPA 82 | 6 | 12 |
| ST_DVI2 | 7 | 12 |
| ST_INAV | 30 | 12 |
| ST_IRBA2 | 33 | 12 |
| ST_OUTAV | 30 | 12 |
| U1 | 31 | 12 |
| U2 | 18 | 12 |

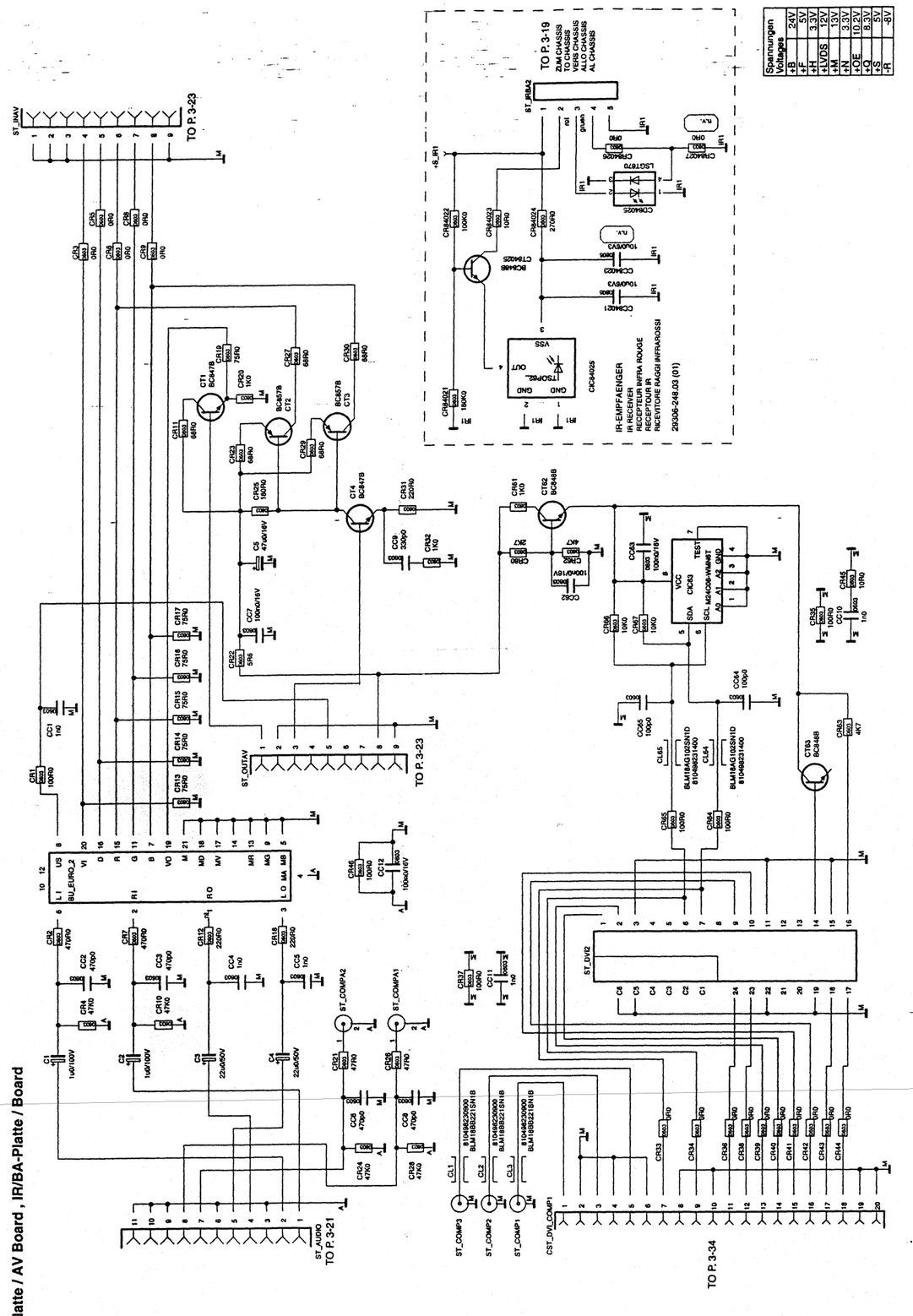


| Spannungen Voltages | |
|---|---|
| +B | 24V |
| +F | 5V |
| +H | 3,3V |
| +LVDS | 3,3V |
| +M | 13V |
| +N | 3,3V |
| +OE | 10,2V |
| +Q | 8,3V |
| +S | 5V |
| +R | -8V |

AV-Platte / AV Board , IR/BA-Platte / Board





## Scaler-Platte / Board

Koordinaten für die Bauteile auf der Bestückungsseite / Coordiantes of the components on the Component Side

| POS. | X | Y |
|---|---|---|
| CC74002 | 32 | 19 |
| CC74011 | 48 | 57 |
| CC74032 | 46 | 59 |
| CC74034 | 86 | 43 |
| CC74036 | 48 | 59 |
| CC74050 | 46 | 58 |
| CC74054 | 86 | 44 |
| CC74056 | 48 | 58 |
| CC74068 | 86 | 40 |
| CC74086 | 46 | 56 |
| CC74088 | 48 | 56 |
| CC74104 | 39 | 5 |
| CC74106 | 41 | 4 |
| CC74108 | 39 | 7 |
| CC74110 | 41 | 6 |
| CC74112 | 39 | 9 |
| CC74114 | 41 | 9 |
| CC74116 | 47 | 37 |
| CC74120 | 47 | 29 |
| CC74122 | 39 | 16 |
| CC74140 | 33 | 41 |
| CC74143 | 43 | 47 |
| CC74145 | 42 | 49 |
| CC74150 | 88 | 31 |
| CC74156 | 77 | 23 |
| CC74160 | 53 | 5 |
| CC74164 | 53 | 14 |
| CC74170 | 53 | 10 |
| CC74180 | 67 | 28 |
| CC74182 | 83 | 67 |
| CC74187 | 82 | 68 |
| CC74190 | 81 | 70 |
| CC74191 | 66 | 17 |
| CC74199 | 58 | 20 |
| CC74210 | 66 | 78 |
| CC74212 | 58 | 68 |
| CC74231 | 70 | 69 |
| CC74234 | 71 | 71 |
| CC74271 | 26 | 44 |
| CC74272 | 30 | 41 |
| CC74278 | 57 | 71 |
| CC74293 | 77 | 10 |
| CC74310 | 104 | 82 |
| CC74311 | 110 | 80 |
| CC74312 | 85 | 68 |
| CC74313 | 99 | 80 |
| CC74314 | 86 | 74 |

| POS. | X | Y |
|---|---|---|
| CC74315 | 86 | 71 |
| CC74316 | 86 | 68 |
| CC74317 | 85 | 66 |
| CC74320 | 116 | 77 |
| CC74321 | 112 | 75 |
| CC74322 | 105 | 75 |
| CC74324 | 96 | 61 |
| CC74325 | 102 | 61 |
| CC74326 | 92 | 61 |
| CC74330 | 86 | 81 |
| CC74331 | 88 | 81 |
| CC74332 | 85 | 76 |
| CC74333 | 89 | 80 |
| CC74334 | 92 | 80 |
| CC74335 | 85 | 70 |
| CC74340 | 83 | 36 |
| CC74344 | 83 | 41 |
| CC74348 | 83 | 47 |
| CC74385 | 85 | 64 |
| CC74387 | 85 | 65 |
| CC74391 | 92 | 82 |
| CC74392 | 92 | 84 |
| CC74393 | 80 | 74 |
| CC74394 | 79 | 69 |
| CC74410 | 122 | 74 |
| CC74411 | 123 | 80 |
| CC74412 | 128 | 76 |
| CC74413 | 92 | 41 |
| CC74414 | 96 | 43 |
| CC74415 | 92 | 29 |
| CC74416 | 91 | 45 |
| CC74417 | 96 | 22 |
| CC74418 | 101 | 52 |
| CC74419 | 112 | 50 |
| CC74420 | 128 | 74 |
| CC74421 | 121 | 64 |
| CC74423 | 96 | 26 |
| CC74424 | 104 | 22 |
| CC74425 | 112 | 22 |
| CC74426 | 92 | 34 |
| CC74427 | 121 | 31 |
| CC74428 | 97 | 52 |
| CC74429 | 122 | 40 |
| CC74430 | 122 | 49 |
| CC74432 | 110 | 49 |
| CC74444 | 122 | 25 |
| CC74451 | 97 | 56 |

| POS. | X | Y |
|---|---|---|
| CC74453 | 94 | 56 |
| CC74467 | 86 | 41 |
| CC74468 | 86 | 46 |
| CC74469 | 86 | 37 |
| CC74470 | 109 | 49 |
| CC74471 | 103 | 48 |
| CC74472 | 108 | 49 |
| CC74473 | 103 | 50 |
| CC74475 | 148 | 65 |
| CC74478 | 148 | 67 |
| CC74480 | 97 | 46 |
| CC74481 | 96 | 48 |
| CC74482 | 95 | 52 |
| CC74483 | 92 | 49 |
| CC74484 | 96 | 39 |
| CC74485 | 95 | 38 |
| CC74486 | 92 | 36 |
| CC74487 | 92 | 43 |
| CC74488 | 92 | 39 |
| CC74491 | 149 | 40 |
| CC74510 | 122 | 43 |
| CC74512 | 122 | 36 |
| CC74514 | 122 | 29 |
| CC74516 | 115 | 22 |
| CC74518 | 101 | 22 |
| CC74520 | 108 | 22 |
| CC74522 | 122 | 44 |
| CC74524 | 122 | 35 |
| CC74526 | 122 | 27 |
| CC74528 | 118 | 22 |
| CC74530 | 102 | 22 |
| CC74532 | 109 | 22 |
| CC74570 | 99 | 52 |
| CC74587 | 100 | 45 |
| CC74610 | 35 | 71 |
| CC74612 | 131 | 53 |
| CC74614 | 126 | 46 |
| CC74616 | 124 | 21 |
| CC74618 | 100 | 12 |
| CC74620 | 134 | 46 |
| CC74622 | 135 | 16 |
| CC74623 | 142 | 26 |
| CC74624 | 131 | 9 |
| CC74634 | 124 | 19 |
| CC74635 | 127 | 16 |
| CC74636 | 143 | 15 |

| POS. | X | Y |
|---|---|---|
| CC74637 | 132 | 16 |
| CC74638 | 129 | 12 |
| CC74645 | 128 | 16 |
| CC74646 | 132 | 12 |
| CC74647 | 131 | 19 |
| CC74648 | 125 | 13 |
| CC74904 | 39 | 4 |
| CC74905 | 37 | 7 |
| CC74907 | 39 | 10 |
| CC74988 | 14 | 12 |
| CIC74110 | 42 | 34 |
| CIC74120 | 42 | 23 |
| CIC74130 | 62 | 23 |
| CIC74140 | 38 | 45 |
| CIC74150 | 82 | 26 |
| CIC74280 | 53 | 72 |
| CIC74290 | 82 | 15 |
| CIC74300 | 95 | 70 |
| CIC74395 | 87 | 54 |
| CIC74420 | 134 | 67 |
| CIC74610 | 128 | 50 |
| CIC74620 | 135 | 50 |
| CL74210 | 60 | 80 |
| CL74230 | 71 | 80 |
| CL74310 | 102 | 83 |
| CL74320 | 116 | 82 |
| CL74330 | 83 | 76 |
| CL74380 | 84 | 61 |
| CL74382 | 89 | 61 |
| CL74390 | 76 | 75 |
| CL74395 | 77 | 75 |
| CL74410 | 131 | 82 |
| CL74415 | 91 | 41 |
| CL74470 | 100 | 49 |
| CL74471 | 152 | 72 |
| CL74475 | 150 | 72 |
| CL74480 | 98 | 48 |
| CL74485 | 96 | 35 |
| CL74490 | 40 | 55 |
| CL74568 | 120 | 20 |
| CL74580 | 85 | 63 |
| CL74582 | 85 | 62 |
| CL74610 | 133 | 82 |
| CQ74225 | 56 | 49 |
| CR74103 | 37 | 5 |
| CR74104 | 38 | 5 |

| POS. | X | Y |
|---|---|---|
| CR74105 | 37 | 6 |
| CR74106 | 38 | 7 |
| CR74107 | 37 | 9 |
| CR74108 | 38 | 9 |
| CR74111 | 37 | 12 |
| CR74117 | 37 | 11 |
| CR74123 | 37 | 10 |
| CR74131 | 33 | 46 |
| CR74135 | 33 | 45 |
| CR74139 | 33 | 48 |
| CR74141 | 28 | 48 |
| CR74142 | 30 | 48 |
| CR74143 | 30 | 48 |
| CR74144 | 81 | 34 |
| CR74145 | 32 | 53 |
| CR74146 | 37 | 34 |
| CR74147 | 42 | 51 |
| CR74148 | 66 | 16 |
| CR74149 | 67 | 14 |
| CR74150 | 83 | 32 |
| CR74151 | 87 | 22 |
| CR74153 | 87 | 23 |
| CR74154 | 77 | 28 |
| CR74155 | 62 | 5 |
| CR74158 | 76 | 23 |
| CR74160 | 51 | 5 |
| CR74161 | 52 | 4 |
| CR74162 | 55 | 5 |
| CR74164 | 60 | 5 |
| CR74165 | 51 | 14 |
| CR74166 | 52 | 12 |
| CR74167 | 55 | 13 |
| CR74169 | 60 | 13 |
| CR74170 | 51 | 10 |
| CR74171 | 52 | 8 |
| CR74172 | 55 | 9 |
| CR74174 | 60 | 9 |
| CR74181 | 53 | 21 |
| CR74182 | 85 | 67 |
| CR74183 | 53 | 21 |
| CR74185 | 82 | 64 |
| CR74186 | 54 | 24 |
| CR74187 | 83 | 68 |
| CR74188 | 53 | 24 |
| CR74190 | 83 | 70 |
| CR74191 | 54 | 27 |
| CR74193 | 53 | 27 |

| POS. | X | Y |
|---|---|---|
| CR74194 | 46 | 41 |
| CR74195 | 44 | 63 |
| CR74210 | 60 | 78 |
| CR74247 | 31 | 43 |
| CR74248 | 27 | 46 |
| CR74249 | 29 | 46 |
| CR74263 | 55 | 75 |
| CR74270 | 55 | 76 |
| CR74272 | 50 | 74 |
| CR74275 | 58 | 77 |
| CR74276 | 55 | 73 |
| CR74277 | 28 | 41 |
| CR74278 | 55 | 71 |
| CR74279 | 26 | 42 |
| CR74280 | 59 | 72 |
| CR74282 | 59 | 71 |
| CR74284 | 59 | 78 |
| CR74285 | 89 | 12 |
| CR74286 | 87 | 12 |
| CR74287 | 87 | 13 |
| CR74288 | 89 | 13 |
| CR74289 | 87 | 14 |
| CR74290 | 87 | 18 |
| CR74291 | 77 | 19 |
| CR74292 | 77 | 16 |
| CR74293 | 75 | 14 |
| CR74294 | 77 | 14 |
| CR74295 | 77 | 13 |
| CR74296 | 75 | 13 |
| CR74330 | 83 | 75 |
| CR74335 | 83 | 69 |
| CR74340 | 82 | 36 |
| CR74342 | 83 | 38 |
| CR74343 | 102 | 80 |
| CR74344 | 82 | 41 |
| CR74346 | 82 | 45 |
| CR74347 | 85 | 48 |
| CR74348 | 83 | 48 |
| CR74350 | 105 | 73 |
| CR74351 | 107 | 73 |
| CR74352 | 108 | 72 |
| CR74353 | 105 | 72 |
| CR74354 | 107 | 71 |
| CR74355 | 108 | 71 |
| CR74356 | 105 | 70 |
| CR74357 | 107 | 70 |

| POS. | X | Y |
|---|---|---|
| CR74360 | 105 | 68 |
| CR74361 | 107 | 68 |
| CR74362 | 108 | 67 |
| CR74363 | 105 | 67 |
| CR74364 | 107 | 66 |
| CR74365 | 108 | 66 |
| CR74366 | 105 | 65 |
| CR74367 | 107 | 65 |
| CR74370 | 97 | 59 |
| CR74371 | 97 | 61 |
| CR74372 | 98 | 59 |
| CR74373 | 99 | 61 |
| CR74374 | 99 | 59 |
| CR74375 | 100 | 61 |
| CR74376 | 100 | 59 |
| CR74377 | 101 | 61 |
| CR74380 | 78 | 30 |
| CR74381 | 82 | 35 |
| CR74382 | 86 | 60 |
| CR74383 | 91 | 59 |
| CR74384 | 94 | 60 |
| CR74386 | 94 | 58 |
| CR74387 | 95 | 58 |
| CR74391 | 89 | 82 |
| CR74392 | 80 | 73 |
| CR74393 | 80 | 72 |
| CR74394 | 79 | 70 |
| CR74395 | 80 | 71 |
| CR74396 | 87 | 58 |
| CR74397 | 89 | 58 |
| CR74398 | 89 | 59 |
| CR74399 | 84 | 60 |
| CR74422 | 133 | 79 |
| CR74423 | 135 | 79 |
| CR74424 | 137 | 79 |
| CR74450 | 89 | 48 |
| CR74454 | 87 | 48 |
| CR74503 | 73 | 42 |
| CR74504 | 12 | 32 |
| CR74505 | 15 | 37 |
| CR74506 | 10 | 33 |
| CR74507 | 12 | 33 |
| CR74508 | 9 | 30 |
| CR74509 | 15 | 36 |
| CR74555 | 125 | 32 |
| CR74557 | 125 | 31 |
| CR74559 | 125 | 29 |

| POS. | X | Y |
|---|---|---|
| CR74562 | 125 | 27 |
| CR74564 | 125 | 26 |
| CR74568 | 119 | 20 |
| CR74570 | 101 | 53 |
| CR74571 | 117 | 20 |
| CR74573 | 116 | 20 |
| CR74575 | 113 | 20 |
| CR74577 | 114 | 20 |
| CR74587 | 99 | 45 |
| CR74634 | 139 | 33 |
| CR74635 | 139 | 34 |
| CR74636 | 129 | 9 |
| CR74637 | 128 | 45 |
| CR74638 | 128 | 43 |
| CR74903 | 37 | 4 |
| CR74906 | 38 | 7 |
| CR74908 | 41 | 10 |
| CR74910 | 42 | 6 |
| CR74914 | 42 | 9 |
| CR74932 | 83 | 42 |
| CR74950 | 87 | 28 |
| CR74952 | 83 | 43 |
| CR74953 | 83 | 34 |
| CR74965 | 44 | 43 |
| CR74966 | 44 | 44 |
| CR74985 | 46 | 43 |
| CR74994 | 42 | 4 |
| CST_SCAG | 41 | 81 |
| CST_SCAV | 21 | 6 |
| CT74011 | 42 | 54 |
| CT74141 | 31 | 51 |
| CT74160 | 58 | 5 |
| CT74165 | 58 | 13 |
| CT74170 | 58 | 9 |
| CT74180 | 50 | 21 |
| CT74185 | 50 | 25 |
| CT74190 | 50 | 28 |
| CT74280 | 58 | 75 |
| CT74290 | 28 | 43 |
| CT74291 | 26 | 39 |
| CT74390 | 77 | 72 |
| CT74504 | 12 | 36 |
| CT74508 | 12 | 30 |
| CT74965 | 44 | 41 |

Koordinaten für die Bauteile auf der Lötseite / Coordiantes of the components on the Solder Side

| POS. | X | Y |
|---|---|---|
| CC74002 | 32 | 19 |
| CC74001 | 25 | 13 |
| CC74003 | 25 | 16 |
| CC74005 | 32 | 19 |
| CC74007 | 24 | 17 |
| CC74009 | 46 | 56 |
| CC74020 | 15 | 14 |
| CC74022 | 15 | 16 |
| CC74024 | 13 | 17 |
| CC74026 | 83 | 43 |
| CC74028 | 46 | 59 |
| CC74030 | 46 | 60 |
| CC74040 | 18 | 14 |
| CC74042 | 18 | 16 |
| CC74044 | 17 | 17 |
| CC74046 | 83 | 43 |
| CC74048 | 46 | 58 |
| CC74052 | 46 | 57 |
| CC74060 | 12 | 13 |
| CC74062 | 12 | 16 |
| CC74064 | 10 | 17 |
| CC74066 | 83 | 40 |
| CC74080 | 22 | 14 |
| CC74082 | 22 | 16 |
| CC74084 | 20 | 17 |
| CC74101 | 39 | 30 |
| CC74129 | 41 | 5 |
| CC74162 | 52 | 8 |
| CC74177 | 44 | 7 |
| CC74181 | 53 | 24 |
| CC74184 | 51 | 69 |
| CC74189 | 51 | 68 |
| CC74192 | 51 | 67 |
| CC74194 | 83 | 38 |

| POS. | X | Y |
|---|---|---|
| CC74196 | 82 | 47 |
| CC74198 | 83 | 42 |
| CC74213 | 50 | 54 |
| CC74214 | 48 | 63 |
| CC74215 | 50 | 61 |
| CC74216 | 50 | 60 |
| CC74222 | 50 | 52 |
| CC74223 | 48 | 52 |
| CC74224 | 55 | 47 |
| CC74226 | 56 | 47 |
| CC74230 | 64 | 47 |
| CC74232 | 69 | 47 |
| CC74250 | 77 | 55 |
| CC74252 | 77 | 59 |
| CC74254 | 78 | 61 |
| CC74260 | 77 | 63 |
| CC74262 | 66 | 68 |
| CC74264 | 62 | 69 |
| CC74266 | 62 | 68 |
| CC74323 | 103 | 69 |
| CC74422 | 126 | 53 |
| CC74440 | 93 | 52 |
| CC74442 | 92 | 51 |
| CC74450 | 88 | 36 |
| CC74452 | 90 | 37 |
| CC74454 | 88 | 37 |
| CC74456 | 89 | 39 |
| CC74458 | 90 | 39 |
| CC74459 | 89 | 40 |
| CC74460 | 89 | 43 |
| CC74462 | 90 | 44 |
| CC74464 | 89 | 44 |
| CC74466 | 86 | 45 |
| CC74477 | 143 | 40 |

| POS. | X | Y |
|---|---|---|
| CC74490 | 140 | 79 |
| CC74493 | 145 | 39 |
| CC74502 | 101 | 56 |
| CC74630 | 126 | 5 |
| CC74632 | 125 | 5 |
| CC74640 | 130 | 4 |
| CC74966 | 50 | 11 |
| CC74980 | 39 | 7 |
| CC79089 | 52 | 27 |
| CIC74200 | 64 | 57 |
| CIC74400 | 107 | 37 |
| CIC74630 | 130 | 14 |
| CL74010 | 28 | 26 |
| CL74011 | 28 | 28 |
| CL74262 | 65 | 68 |
| CL74264 | 64 | 68 |
| CL74567 | 120 | 20 |
| CNL74472 | 121 | 56 |
| CNL74474 | 119 | 58 |
| CNL74476 | 121 | 61 |
| CQ74440 | 89 | 53 |
| CR74001 | 24 | 14 |
| CR74002 | 25 | 15 |
| CR74003 | 25 | 14 |
| CR74005 | 24 | 15 |
| CR74007 | 24 | 16 |
| CR74009 | 24 | 22 |
| CR74011 | 25 | 22 |
| CR74013 | 30 | 26 |
| CR74015 | 48 | 57 |
| CR74020 | 13 | 14 |
| CR74022 | 15 | 13 |

| POS. | X | Y |
|---|---|---|
| CR74024 | 13 | 15 |
| CR74026 | 13 | 16 |
| CR74028 | 13 | 22 |
| CR74030 | 15 | 22 |
| CR74031 | 27 | 22 |
| CR74032 | 86 | 43 |
| CR74034 | 48 | 59 |
| CR74040 | 17 | 14 |
| CR74042 | 18 | 13 |
| CR74044 | 17 | 15 |
| CR74046 | 17 | 16 |
| CR74048 | 17 | 22 |
| CR74050 | 18 | 22 |
| CR74052 | 86 | 44 |
| CR74054 | 48 | 58 |
| CR74060 | 10 | 14 |
| CR74062 | 12 | 14 |
| CR74064 | 10 | 15 |
| CR74066 | 10 | 16 |
| CR74068 | 10 | 22 |
| CR74070 | 11 | 22 |
| CR74072 | 86 | 40 |
| CR74080 | 20 | 14 |
| CR74082 | 22 | 13 |
| CR74084 | 20 | 15 |
| CR74086 | 20 | 16 |
| CR74088 | 20 | 22 |
| CR74090 | 22 | 22 |
| CR74092 | 48 | 56 |
| CR74101 | 30 | 28 |
| CR74113 | 37 | 12 |
| CR74114 | 42 | 16 |
| CR74119 | 37 | 11 |
| CR74121 | 42 | 13 |

| POS. | X | Y |
|---|---|---|
| CR74125 | 37 | 10 |
| CR74127 | 42 | 10 |
| CR74129 | 44 | 13 |
| CR74163 | 55 | 5 |
| CR74168 | 55 | 13 |
| CR74173 | 55 | 9 |
| CR74175 | 55 | 7 |
| CR74176 | 44 | 12 |
| CR74177 | 47 | 5 |
| CR74178 | 46 | 5 |
| CR74179 | 47 | 11 |
| CR74180 | 56 | 24 |
| CR74184 | 53 | 69 |
| CR74189 | 53 | 68 |
| CR74192 | 53 | 67 |
| CR74196 | 86 | 38 |
| CR74197 | 83 | 47 |
| CR74198 | 86 | 42 |
| CR74199 | 48 | 11 |
| CR74230 | 59 | 47 |
| CR74232 | 79 | 59 |
| CR74234 | 77 | 58 |
| CR74236 | 79 | 57 |
| CR74238 | 77 | 56 |
| CR74240 | 77 | 54 |
| CR74242 | 79 | 53 |
| CR74244 | 78 | 52 |
| CR74246 | 79 | 51 |
| CR74250 | 77 | 61 |
| CR74252 | 77 | 62 |
| CR74254 | 61 | 47 |
| CR74256 | 60 | 47 |
| CR74262 | 68 | 68 |
| CR74388 | 105 | 60 |

| POS. | X | Y |
|---|---|---|
| CR74389 | 111 | 62 |
| CR74390 | 114 | 62 |
| CR74464 | 86 | 41 |
| CR74466 | 86 | 46 |
| CR74468 | 86 | 37 |
| CR74501 | 99 | 58 |
| CR74502 | 100 | 58 |
| CR74510 | 138 | 30 |
| CR74511 | 137 | 31 |
| CR74512 | 136 | 30 |
| CR74513 | 136 | 31 |
| CR74514 | 134 | 30 |
| CR74515 | 133 | 31 |
| CR74516 | 133 | 30 |
| CR74517 | 132 | 31 |
| CR74518 | 132 | 30 |
| CR74519 | 131 | 31 |
| CR74520 | 130 | 30 |
| CR74521 | 130 | 28 |
| CR74522 | 128 | 26 |
| CR74523 | 127 | 28 |
| CR74524 | 127 | 26 |
| CR74525 | 126 | 24 |
| CR74526 | 119 | 18 |
| CR74527 | 118 | 17 |
| CR74528 | 116 | 17 |
| CR74529 | 118 | 16 |
| CR74530 | 116 | 14 |
| CR74531 | 114 | 14 |
| CR74532 | 113 | 13 |
| CR74533 | 114 | 12 |
| CR74534 | 113 | 12 |
| CR74535 | 111 | 11 |
| CR74536 | 113 | 11 |

| POS. | X | Y |
|---|---|---|
| CR74537 | 111 | 10 |
| CR74538 | 113 | 8 |
| CR74539 | 111 | 8 |
| CR74540 | 113 | 7 |
| CR74541 | 111 | 6 |
| CR74542 | 135 | 30 |
| CR74543 | 129 | 30 |
| CR74544 | 114 | 15 |
| CR74545 | 111 | 9 |
| CR74550 | 135 | 31 |
| CR74551 | 129 | 28 |
| CR74552 | 116 | 15 |
| CR74553 | 113 | 9 |
| CR74554 | 124 | 32 |
| CR74556 | 124 | 31 |
| CR74558 | 124 | 30 |
| CR74560 | 124 | 29 |
| CR74561 | 124 | 28 |
| CR74563 | 124 | 26 |
| CR74565 | 124 | 25 |
| CR74566 | 90 | 30 |
| CR74567 | 119 | 20 |
| CR74569 | 118 | 20 |
| CR74572 | 117 | 20 |
| CR74576 | 113 | 20 |
| CR74578 | 114 | 20 |
| CR74580 | 90 | 28 |
| CR74581 | 89 | 30 |
| CR74582 | 89 | 31 |
| CR74583 | 89 | 33 |
| CR74584 | 89 | 32 |
| CR74585 | 89 | 34 |
| CR74590 | 92 | 18 |
| CR74591 | 91 | 18 |

| POS. | X | Y |
|---|---|---|
| CR74592 | 94 | 18 |
| CR74593 | 93 | 18 |
| CR74598 | 96 | 18 |
| CR74599 | 95 | 18 |
| CR74630 | 127 | 5 |
| CR74632 | 125 | 5 |
| CR74640 | 132 | 6 |
| CR74641 | 129 | 6 |
| CR74686 | 89 | 35 |
| CR74982 | 56 | 20 |
| CR74984 | 56 | 18 |
| CR74987 | 56 | 27 |
| CR74989 | 56 | 29 |
| CR74990 | 56 | 26 |
| CR74992 | 58 | 23 |
| CST_DIS1 | 153 | 56 |
| CST_DIS2 | 138 | 51 |
| CST_DIS3 | 150 | 52 |
| CST_DVI_ | 90 | 75 |
| CST_EMV1 | 140 | 84 |
| CT74010 | 24 | 20 |
| CT74020 | 14 | 20 |
| CT74040 | 18 | 20 |
| CT74060 | 11 | 20 |
| CT74080 | 21 | 20 |
| CT74175 | 47 | 8 |
| CT74967 | 40 | 10 |
| CT74968 | 40 | 13 |
| CT74969 | 40 | 16 |

**Scaler-Platte / Board**

Bestückungsseite, Ansicht von oben / Component Side, Top View

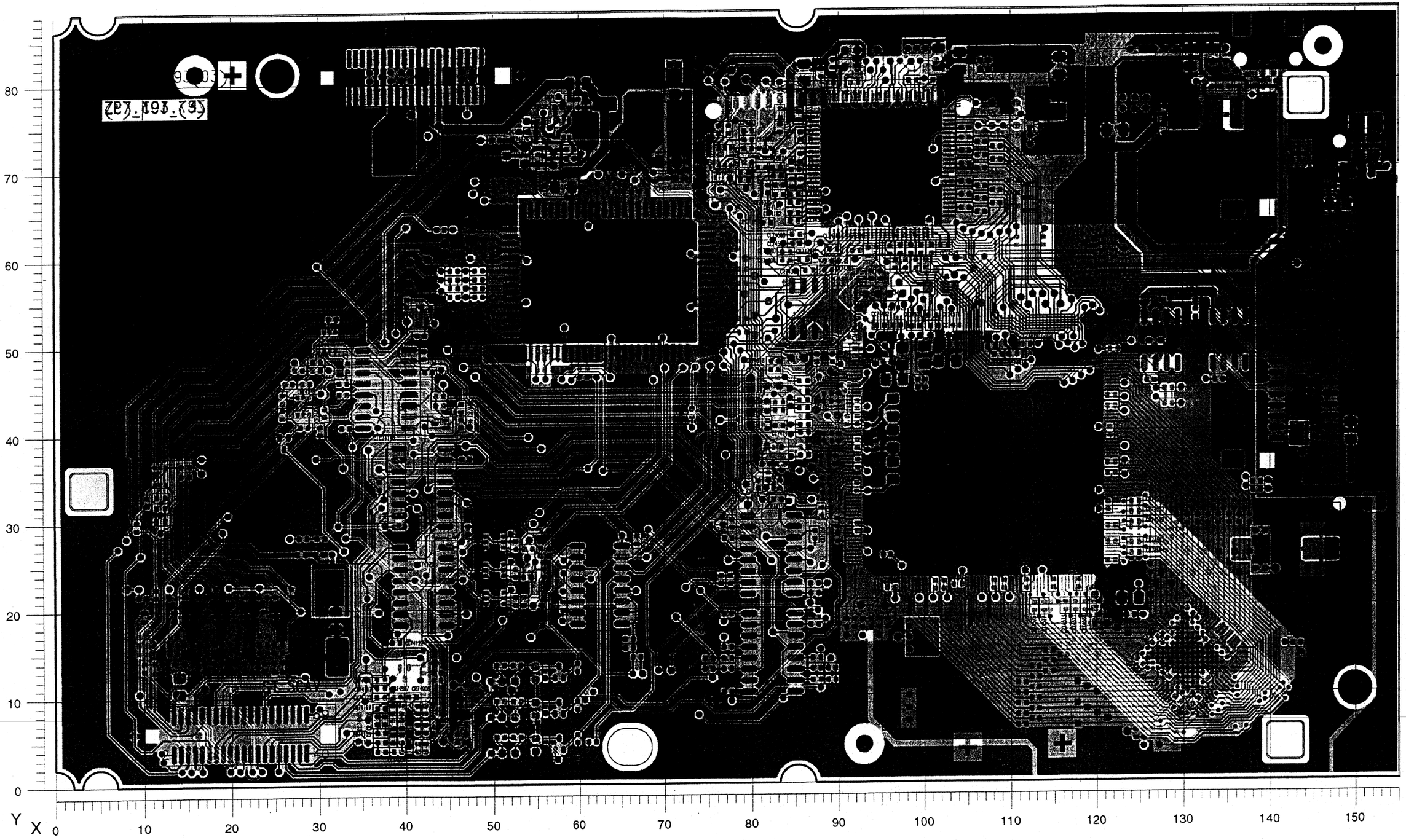

**Scaler-Platte / Board**

Lötseite, Ansicht von unten / Solder Side, Bottom View

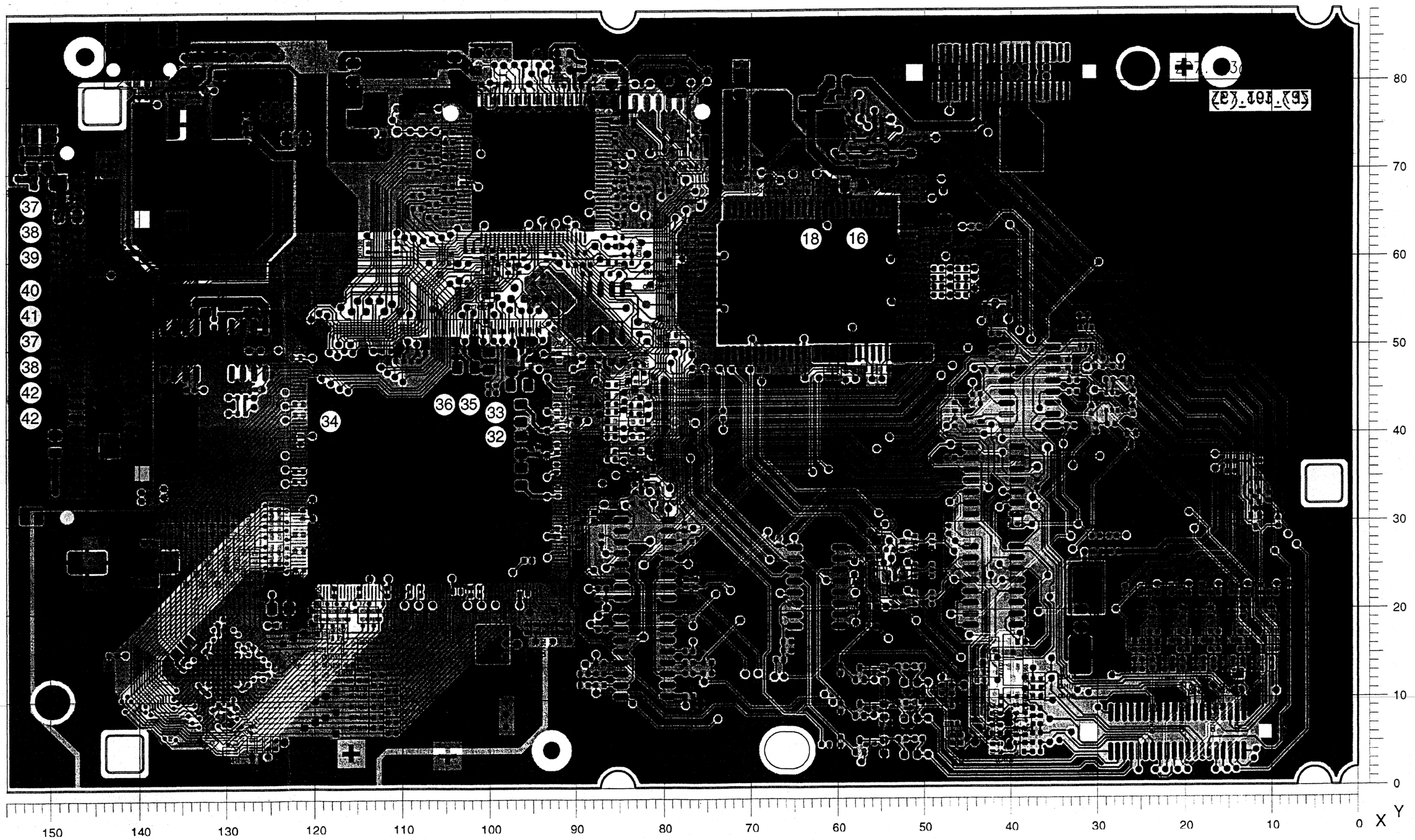

## Scaler-Platte – Eingang / Scaler Board – Input

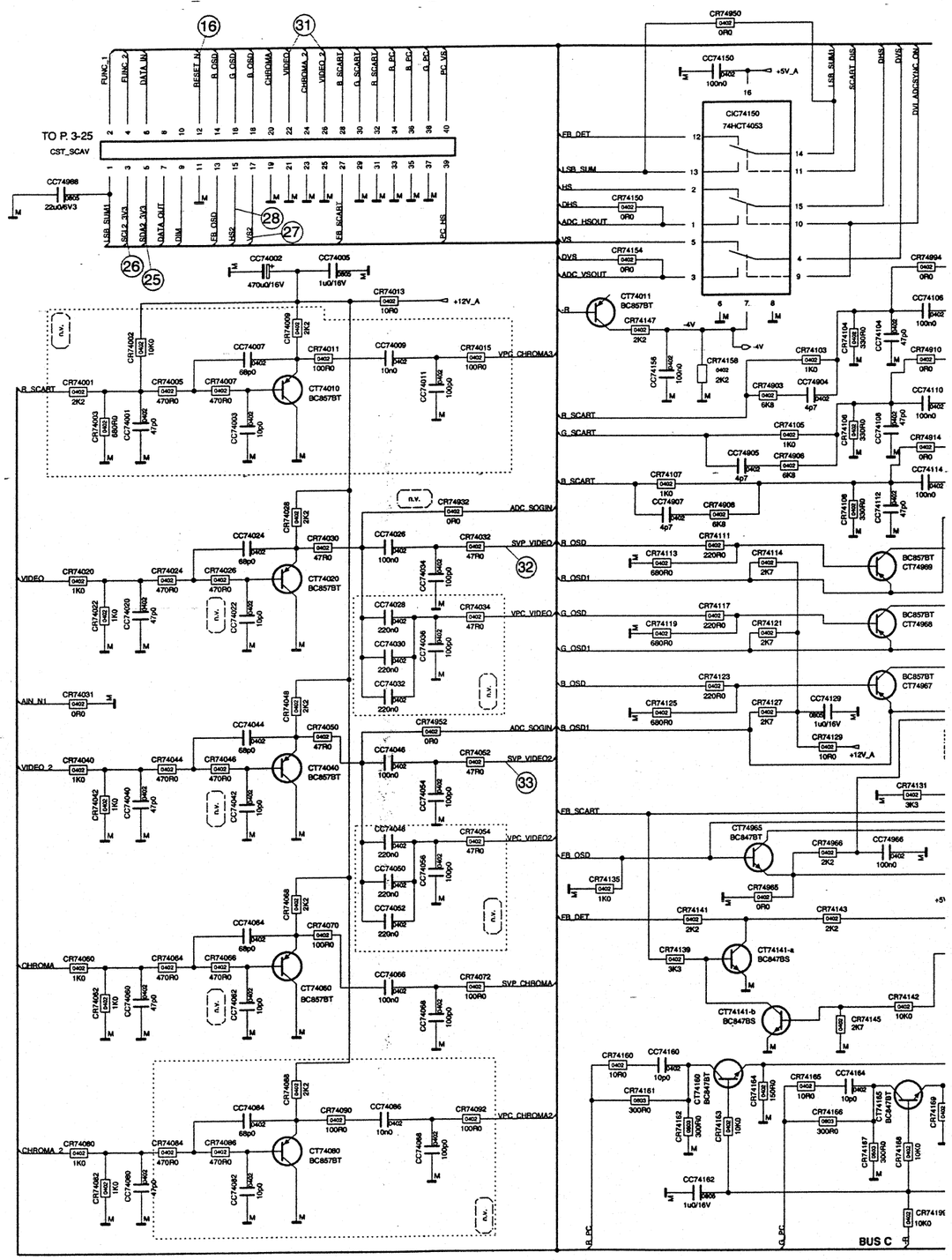






## Scaler-Platte – Eingang / Scaler Board – Input

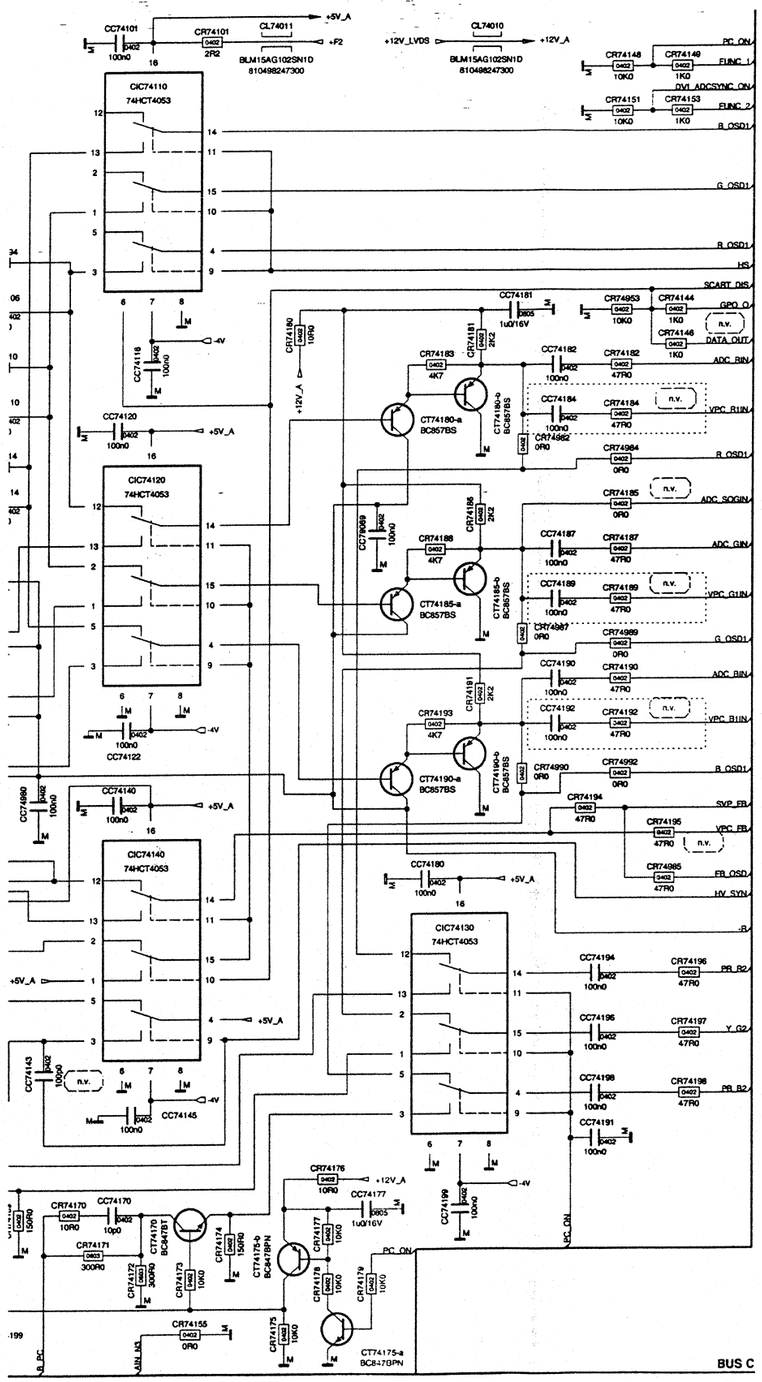


| Spannungen Voltages | |
|---|---|
| +B | 24V |
| +F | 5V |
| +H | 3.3V |
| +LVDS | 12V |
| +M | 13V |
| +N | 3.3V |
| +OE | 10.2V |
| +Q | 8.3V |
| +S | 5V |
| -R | -8V |

# Scaler-Platte – VPC-Konverter / Board – VPC Converter

| Spannungen Voltages | |
|---|---|
| +B | 24V |
| +F | 5V |
| +H | 3.3V |
| +LVDS | 12V |
| +M | 13V |
| +N | 3.3V |
| +OE | 10.2V |
| +Q | 8.3V |
| +S | 5V |
| -R | -8V |

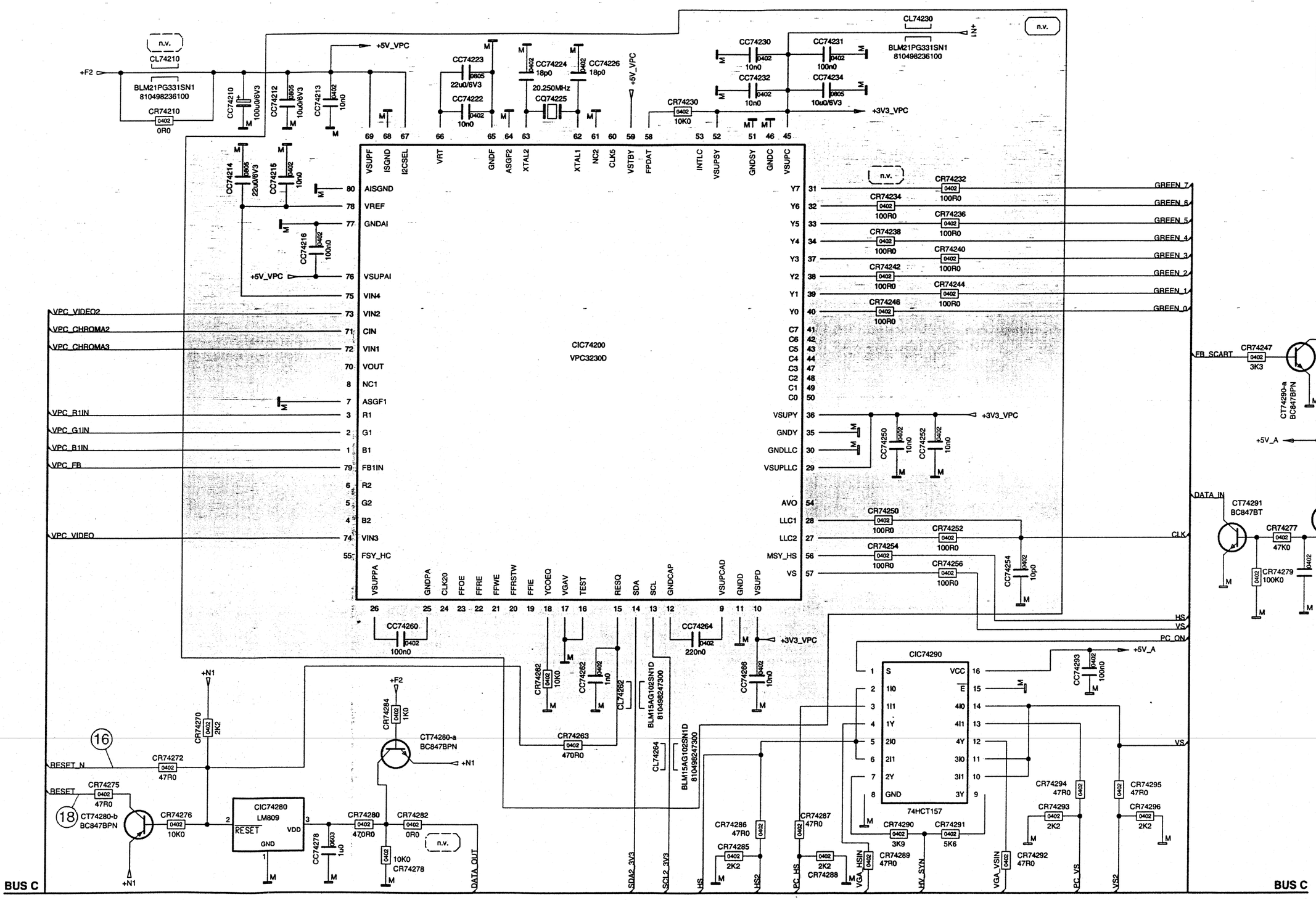

# Scaler-Platte – DVI & RGB Konverter
# Scaler Board – DVI & RGB Converter

| Spannungen Voltages | |
|---|---|
| +B | 24V |
| +F | 5V |
| +H | 3.3V |
| +LVDS | 12V |
| +M | 13V |
| +N | 3.3V |
| +OE | 10.2V |
| +Q | 8.3V |
| +S | 5V |
| -R | -8V |

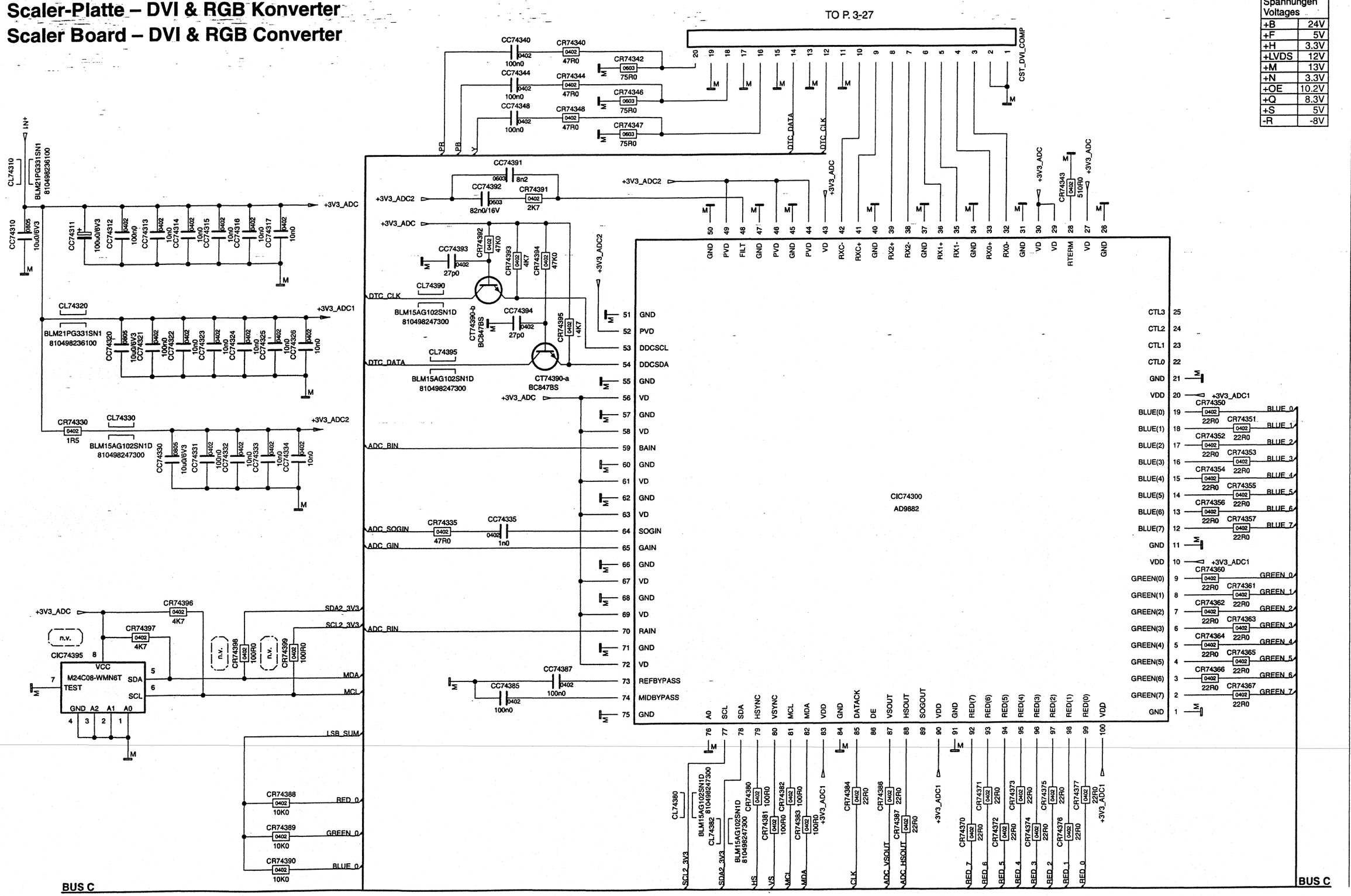

# Scaler-Platte / Board – Scaler Display Interface

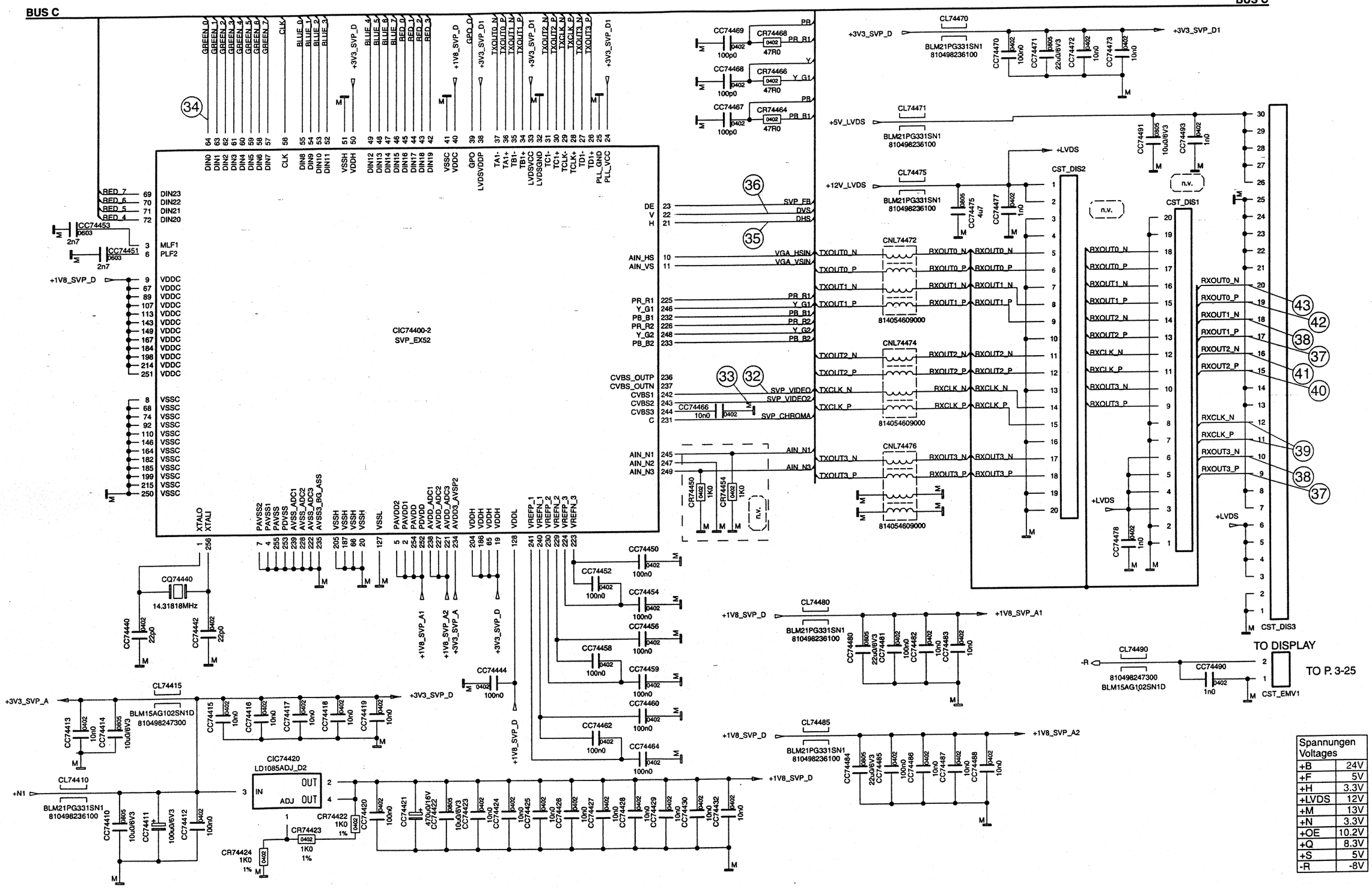


| Spannungen Voltages | |
|---|---|
| +B | 24V |
| +F | 5V |
| +H | 3.3V |
| +LVDS | 12V |
| +M | 13V |
| +N | 3.3V |
| +OE | 10.2V |
| +Q | 8.3V |
| +S | 5V |
| -R | -8V |

# Scaler-Platte / Board – Scaler-Steuerung/Control

| Spannungen Voltages | |
|---|---|
| +B | 24V |
| +F | 5V |
| +H | 3.3V |
| +LVDS | 12V |
| +M | 13V |
| +N | 3.3V |
| +OE | 10.2V |
| +Q | 8.3V |
| +S | 5V |
| -R | -8V |

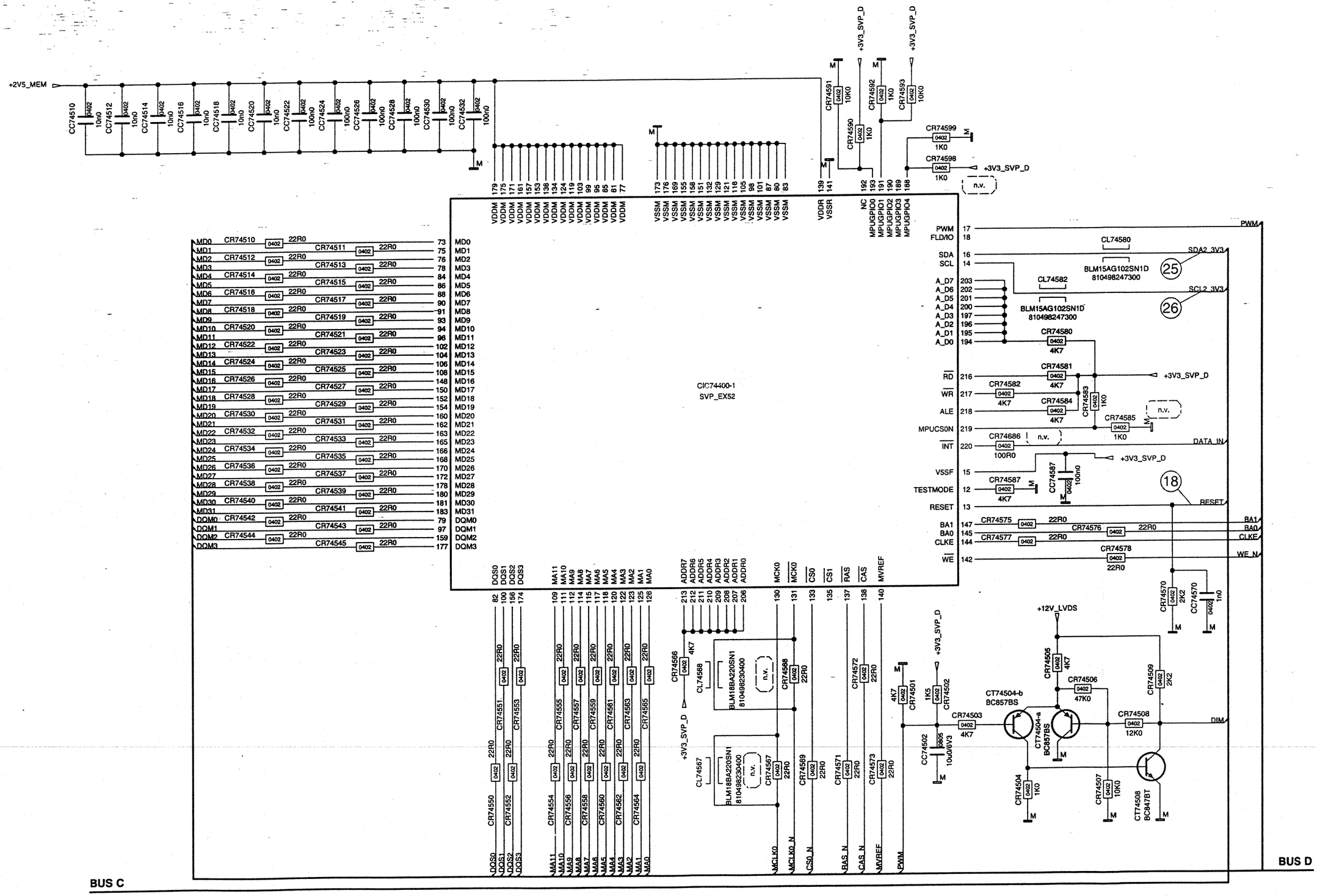

## Scaler-Platte – Speicher / Board – Memory

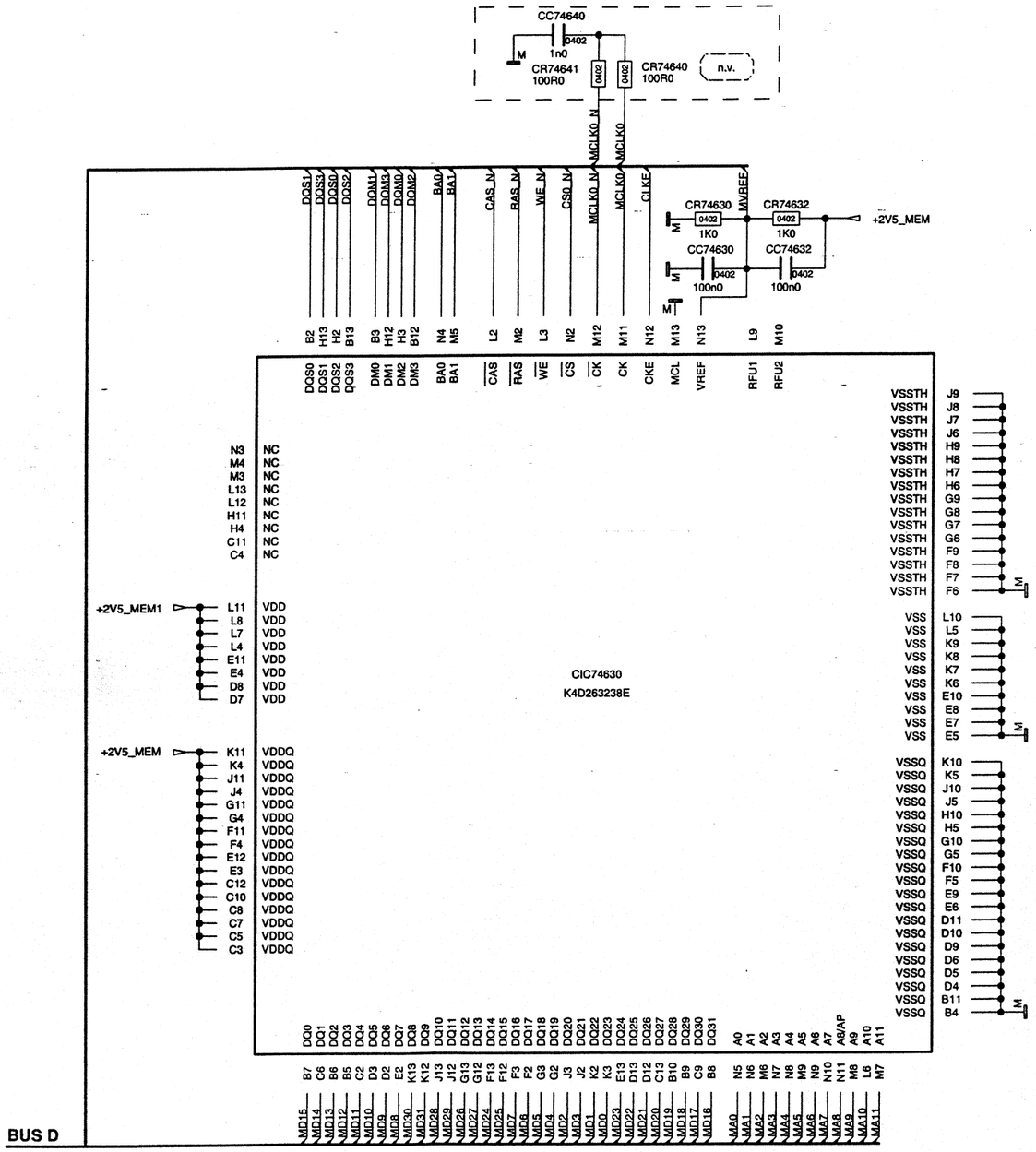


## Scaler-Platte – Netzteil / Board – Power Supply

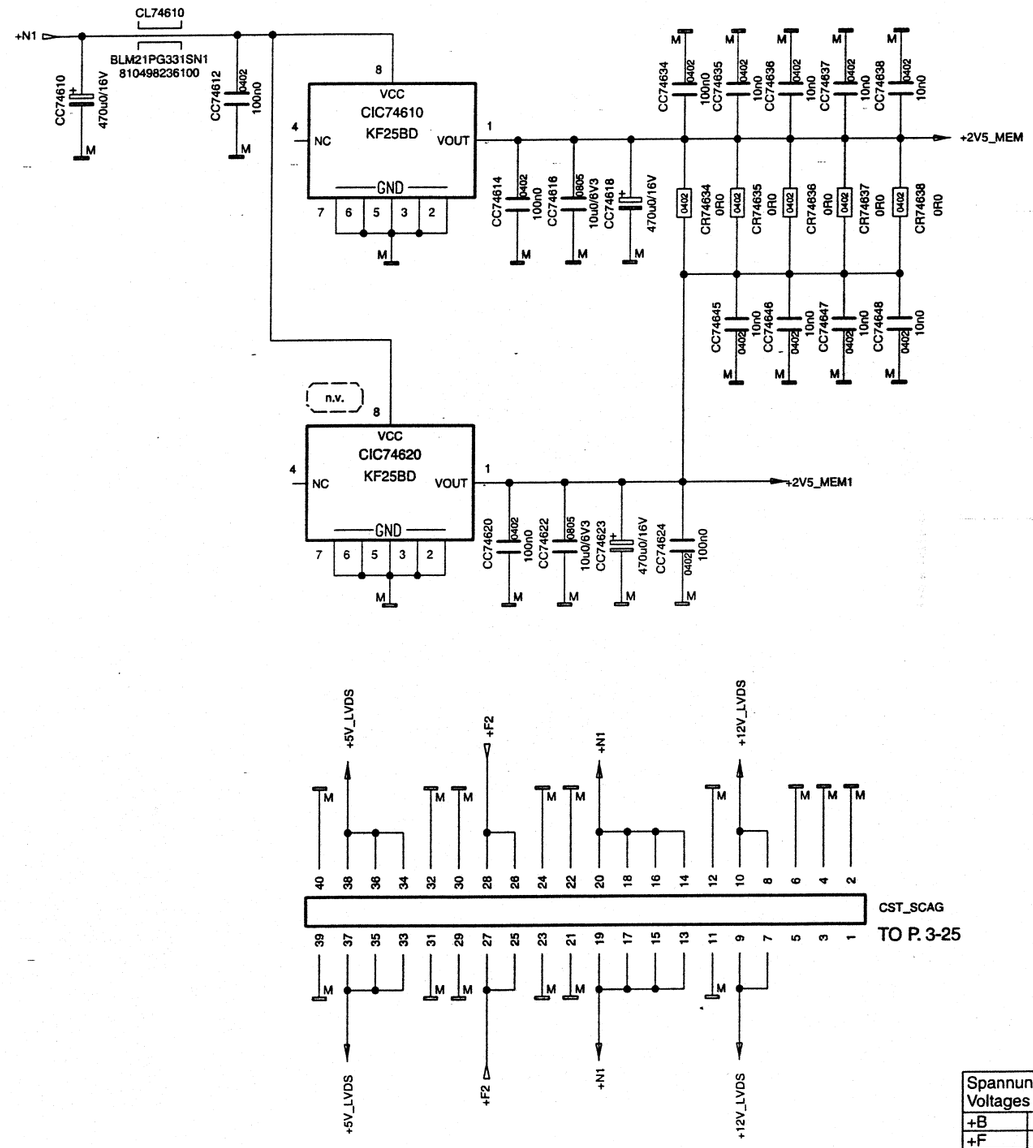


| Spannungen Voltages | |
|---|---|
| +B | 24V |
| +F | 5V |
| +H | 3.3V |
| +LVDS | 12V |
| +M | 13V |
| +N | 3.3V |
| +OE | 10.2V |
| +Q | 8.3V |
| +S | 5V |
| -R | -8V |

# M2-Platte / M2 Board

Lötseite, Ansicht von unten / Solder Side, Bottom View

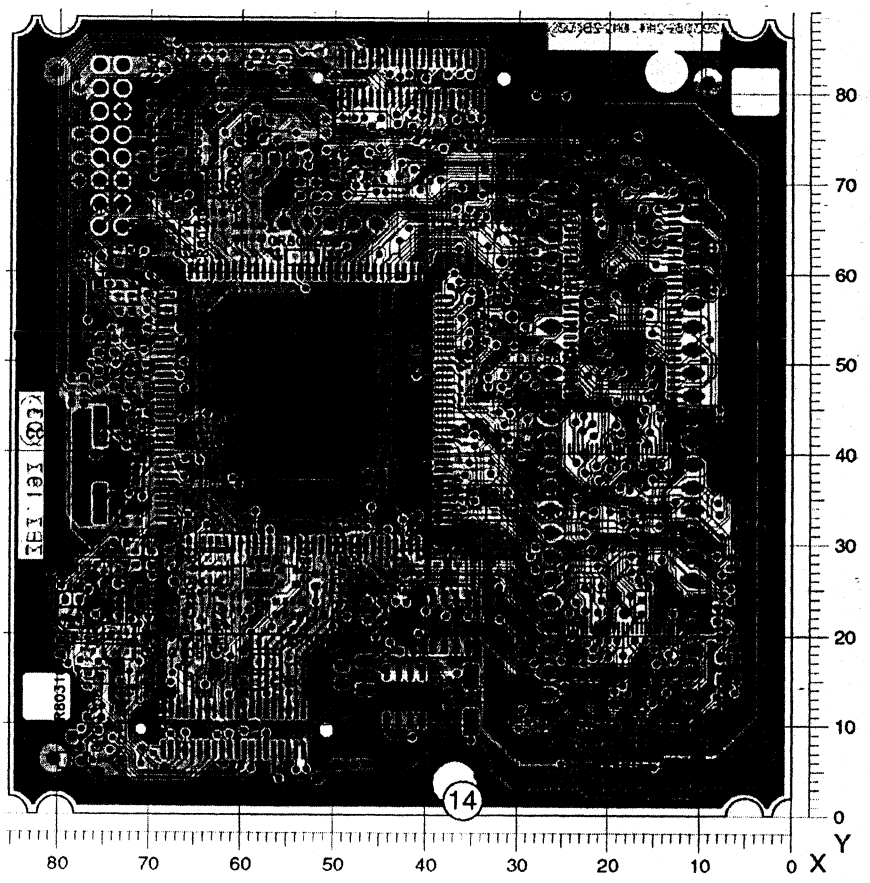


| POS. | X | Y |
|---|---|---|
| CC80114 | 71 | 29 |
| CC80115 | 73 | 14 |
| CC80116 | 73 | 23 |
| CC80191 | 67 | 54 |
| CC80192 | 67 | 56 |
| CC80193 | 67 | 58 |
| CC80199 | 73 | 57 |
| CC80206 | 71 | 37 |
| CC80207 | 74 | 42 |
| CC80211 | 75 | 61 |
| CC80213 | 70 | 78 |
| CC80232 | 36 | 25 |
| CC80234 | 34 | 13 |
| CC80243 | 37 | 13 |
| CC80251 | 47 | 33 |
| CC80252 | 62 | 44 |
| CC80253 | 50 | 32 |
| CC80254 | 63 | 41 |
| CC80257 | 12 | 10 |
| CC80258 | 12 | 4 |
| CC80259 | 19 | 4 |
| CC80264 | 26 | 4 |
| CC80268 | 20 | 10 |

| POS. | X | Y |
|---|---|---|
| CC80306 | 78 | 6 |
| CC80312 | 77 | 20 |
| CC82001 | 22 | 15 |
| CC82041 | 30 | 65 |
| CC82042 | 31 | 58 |
| CD80259 | 20 | 6 |
| CIC80250 | 12 | 7 |
| CIC80251 | 8 | 7 |
| CL80238 | 47 | 6 |
| CR80041 | 68 | 28 |
| CR80068 | 63 | 70 |
| CR80106 | 71 | 24 |
| CR80107 | 74 | 27 |
| CR80108 | 73 | 18 |
| CR80111 | 70 | 14 |
| CR80114 | 66 | 31 |
| CR80115 | 73 | 20 |
| CR80116 | 63 | 28 |
| CR80138 | 60 | 29 |
| CR80139 | 57 | 19 |

| POS. | X | Y |
|---|---|---|
| CR80141 | 57 | 17 |
| CR80146 | 59 | 15 |
| CR80148 | 55 | 29 |
| CR80201 | 76 | 53 |
| CR80206 | 72 | 42 |
| CR80208 | 68 | 68 |
| CR80209 | 66 | 63 |
| CR80210 | 68 | 64 |
| CR80211 | 69 | 72 |
| CR80212 | 67 | 72 |
| CR80213 | 63 | 26 |
| CR80214 | 63 | 30 |
| CR80216 | 45 | 36 |
| CR80217 | 45 | 38 |
| CR80219 | 67 | 77 |
| CR80221 | 51 | 76 |
| CR80226 | 73 | 62 |
| CR80227 | 41 | 27 |
| CR80228 | 39 | 28 |
| CR80231 | 36 | 28 |
| CR80232 | 41 | 28 |
| CR80255 | 53 | 62 |
| CR80257 | 16 | 9 |

| POS. | X | Y |
|---|---|---|
| CR80258 | 16 | 5 |
| CR80259 | 23 | 5 |
| CR80260 | 36 | 75 |
| CR80261 | 41 | 51 |
| CR80264 | 23 | 7 |
| CR80266 | 25 | 75 |
| CR80268 | 18 | 6 |
| CR80306 | 76 | 15 |
| CR80310 | 80 | 18 |
| CR80312 | 78 | 24 |
| CR82001 | 32 | 33 |
| CR82002 | 32 | 36 |
| CR82004 | 16 | 23 |
| CR82022 | 34 | 71 |
| CR82041 | 32 | 56 |
| CR82042 | 30 | 50 |
| P_CS3 | 54 | 63 |

**M2-Platte / M2 Board**

**Bestückungsseite, Ansicht von oben / Component Side, Top View**

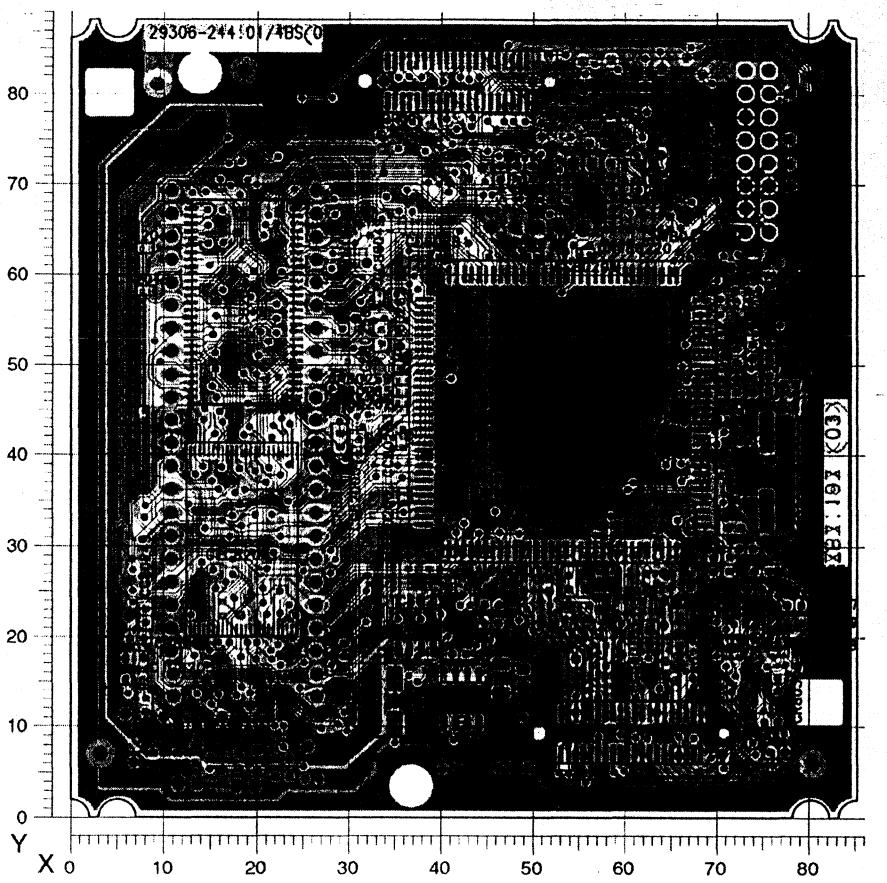


| POS. | X | Y |
|---|---|---|
| CC80049 | 33 | 57 |
| CC80066 | 55 | 72 |
| CC80068 | 58 | 72 |
| CC80113 | 77 | 7 |
| CC80202 | 74 | 52 |
| CC80208 | 76 | 52 |
| CC80209 | 76 | 48 |
| CC80210 | 74 | 48 |
| CC80214 | 67 | 22 |
| CC80244 | 35 | 13 |
| CC80245 | 42 | 18 |
| CC80246 | 47 | 16 |
| CC80247 | 49 | 16 |
| CC80249 | 8 | 22 |
| CC80271 | 59 | 27 |
| CC80272 | 50 | 62 |
| CC80273 | 70 | 53 |
| CC80276 | 70 | 49 |
| CC80277 | 70 | 47 |
| CC80278 | 71 | 44 |
| CC80281 | 40 | 62 |
| CC80282 | 35 | 50 |
| CC80283 | 36 | 41 |
| CC80286 | 36 | 35 |
| CC80287 | 44 | 28 |

| POS. | X | Y |
|---|---|---|
| CC80288 | 70 | 38 |
| CC80291 | 56 | 62 |
| CC80292 | 57 | 27 |
| CC80307 | 75 | 27 |
| CC82005 | 31 | 41 |
| CC82021 | 29 | 19 |
| CC82031 | 8 | 12 |
| CC82043 | 8 | 44 |
| CC82046 | 8 | 58 |
| CC82048 | 8 | 63 |
| CIC80000 | 53 | 45 |
| CIC80230 | 37 | 21 |
| CIC80240 | 42 | 13 |
| CIC82001 | 18 | 31 |
| CIC82031 | 7 | 16 |
| CIC82041 | 18 | 57 |
| CL80109 | 70 | 28 |
| CL80110 | 71 | 28 |
| CL80161 | 63 | 20 |
| CL80162 | 54 | 26 |
| CL80163 | 56 | 26 |
| CL80256 | 33 | 53 |
| CL80306 | 73 | 30 |
| CL80311 | 72 | 32 |
| CNW80121 | 50 | 26 |

| POS. | X | Y |
|---|---|---|
| CNW80132 | 55 | 23 |
| CNW80144 | 60 | 23 |
| CNW80161 | 64 | 26 |
| CNW80171 | 63 | 66 |
| CNW80191 | 73 | 57 |
| CNW80218 | 78 | 47 |
| CNW80220 | 59 | 64 |
| CR80067 | 59 | 68 |
| CR80112 | 74 | 25 |
| CR80117 | 45 | 24 |
| CR80118 | 45 | 22 |
| CR80119 | 58 | 77 |
| CR80121 | 60 | 75 |
| CR80122 | 57 | 75 |
| CR80203 | 72 | 51 |
| CR80205 | 72 | 48 |
| CR80215 | 66 | 20 |
| CR80220 | 67 | 26 |
| CR80250 | 50 | 71 |
| CR80251 | 46 | 71 |
| CR80252 | 48 | 71 |
| CR80253 | 52 | 69 |
| CR80254 | 54 | 69 |
| CR80256 | 36 | 48 |
| CR80262 | 36 | 46 |

| POS. | X | Y |
|---|---|---|
| CR80265 | 36 | 47 |
| CR80307 | 78 | 24 |
| CR80308 | 77 | 15 |
| CR80309 | 78 | 22 |
| CR80311 | 76 | 11 |
| CR80313 | 74 | 21 |
| CR82005 | 29 | 42 |
| CR82031 | 7 | 20 |
| CSTPRO1 | 42 | 81 |
| CSTPRO2 | 61 | 9 |
| CT80110 | 72 | 19 |
| CT80119 | 61 | 71 |
| CT80308 | 77 | 19 |
| IC82021 | 11 | 44 |
| P_CSSDRA | 43 | 71 |
| Q80205 | 75 | 38 |
| ST_JTAG | 76 | 65 |
| ST_TEST1 | 45 | 65 |
| ST_TEST3 | 32 | 64 |

**M2-Platte / M2 Board**

**Bestückungsseite, Ansicht von oben / Component Side, Top View**

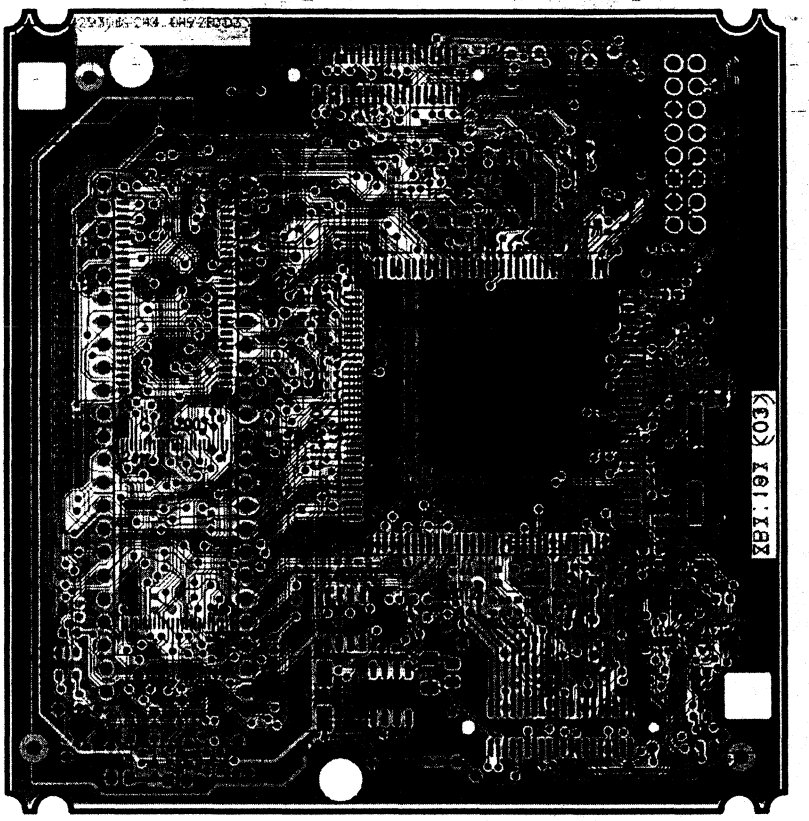

# M2-Platte / M2 Board

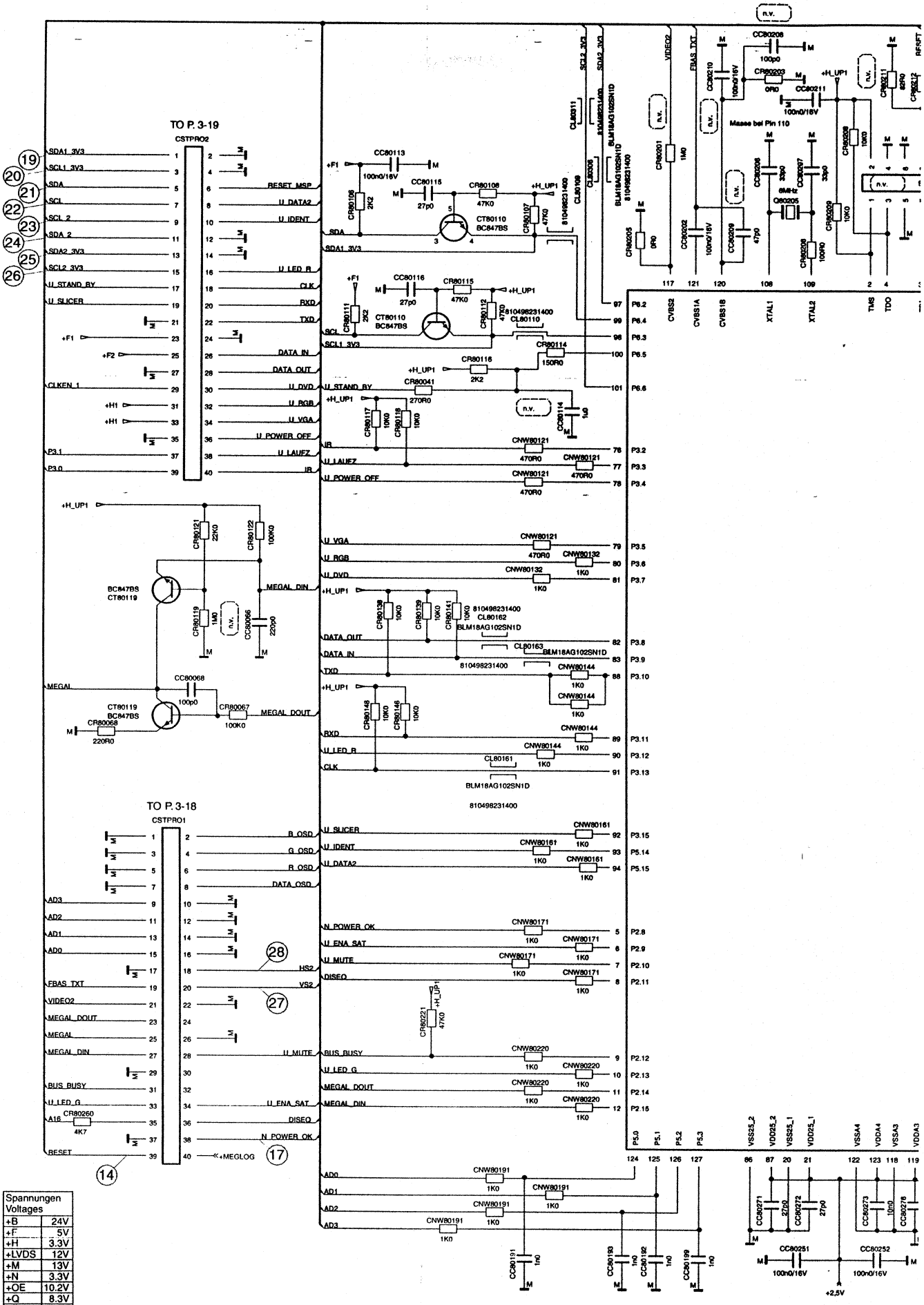


| Spannungen Voltages | |
|---|---|
| +B | 24V |
| +F | 5V |
| +H | 3.3V |
| +LVDS | 12V |
| +M | 13V |
| +N | 3.3V |
| +OE | 10.2V |
| +Q | 8.3V |
| +S | 5V |
| -R | -8V |

## M2-Platte / M2 Board

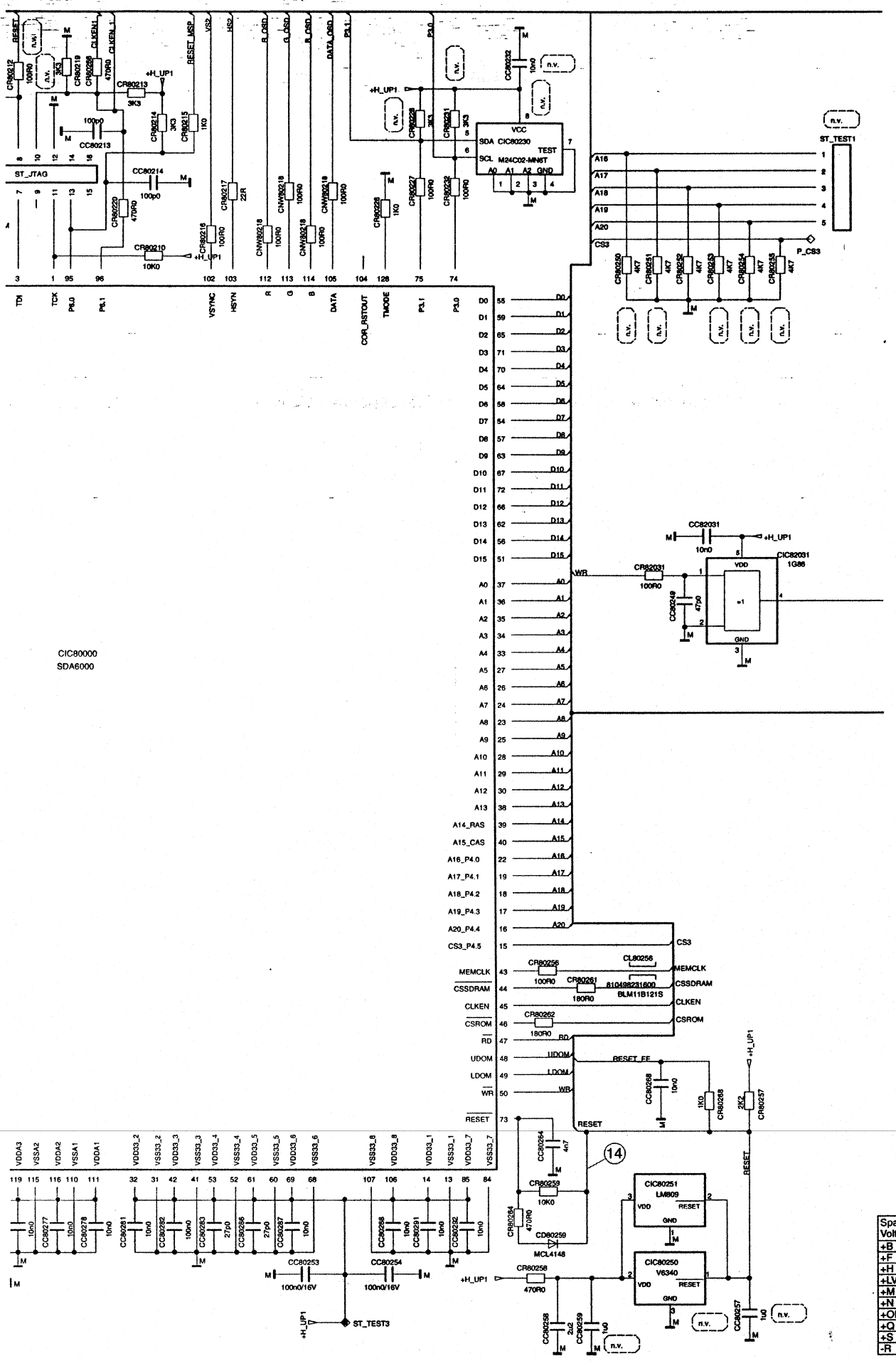


| Spannungen Voltages | |
|---|---|
| +B | 24V |
| +F | 5V |
| +H | 3.3V |
| +LVDS | 12V |
| +M | 13V |
| +N | 3.3V |
| +OE | 10.2V |
| +Q | 8.3V |
| +S | 5V |
| -R | -8V |

## M2-Platte / M2 Board

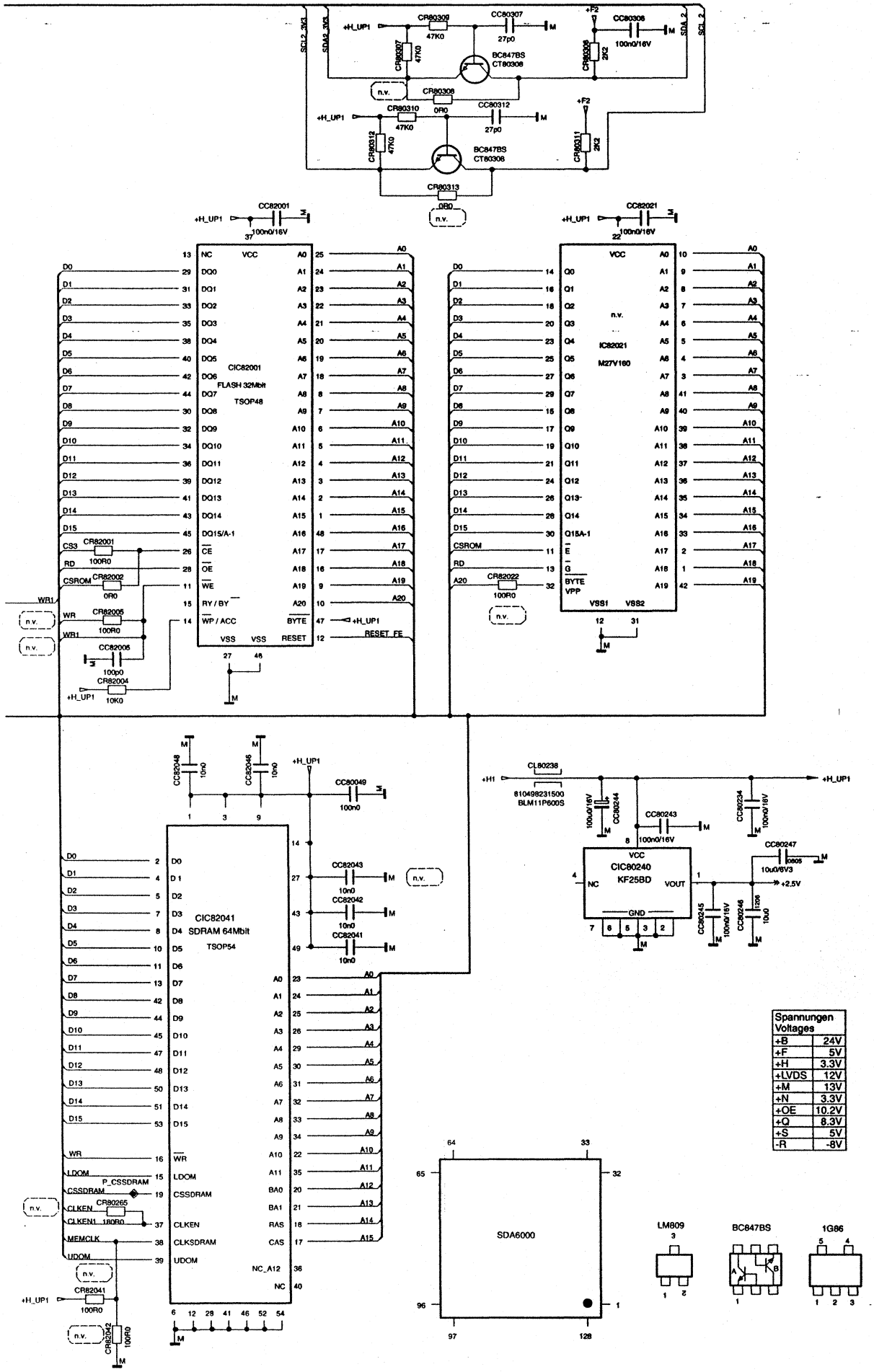


| Spannungen Voltages | |
|---|---|
| +B | 24V |
| +F | 5V |
| +H | 3.3V |
| +LVDS | 12V |
| +M | 13V |
| +N | 3.3V |
| +OE | 10.2V |
| +Q | 8.3V |
| +S | 5V |
| -R | -8V |

## Oszillogramme / Oscillograms

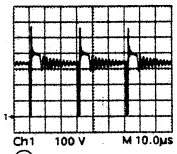

① Mode: Standby

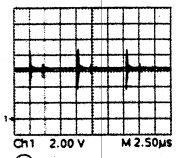

②

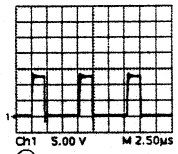

③

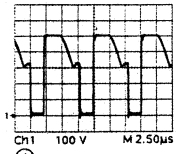

④

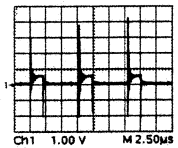

⑤

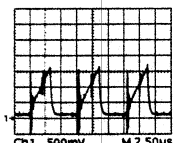

⑥

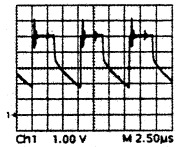

⑦

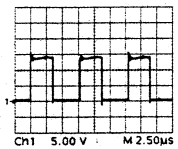

⑧

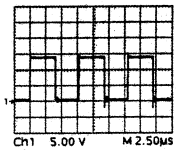

⑨

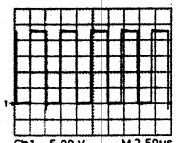

⑩

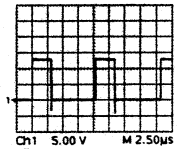

⑪

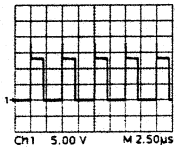

⑫

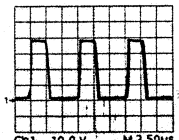

⑬

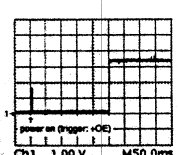

⑭

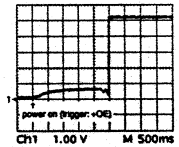

⑮

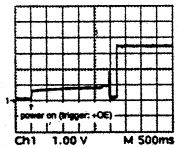

⑯

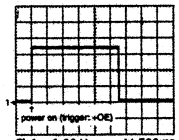

⑰

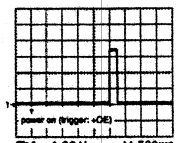

⑱

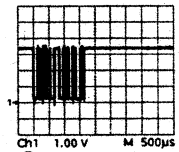

⑲

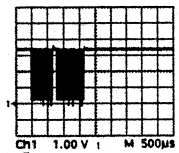

⑳

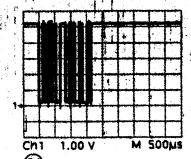

㉑

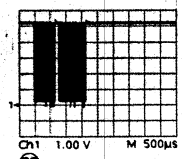

㉒

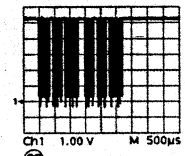

㉓

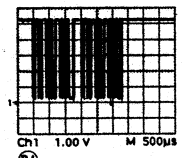

㉔





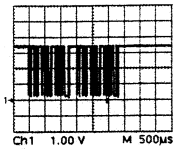

㉕

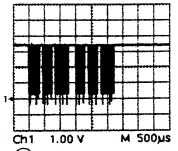

㉖

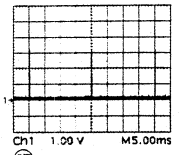

㉗

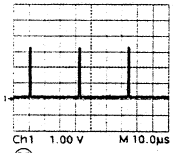

㉘

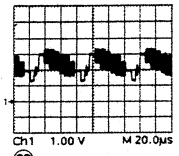

㉙

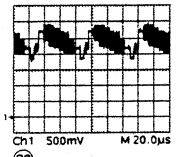

㉚

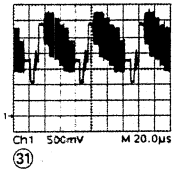

㉛

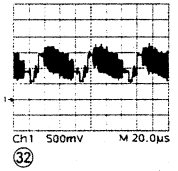

㉜

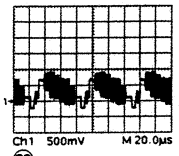

㉝

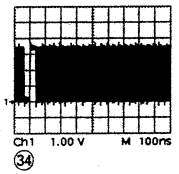

㉞

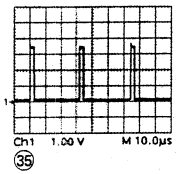

㉟

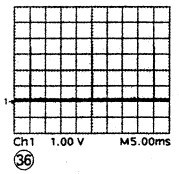

㊱

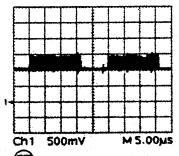

㊲

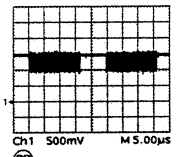

㊳

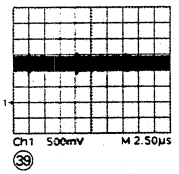

㊴

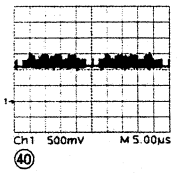

㊵

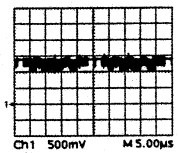

㊶

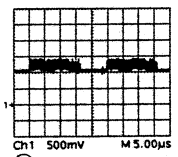

㊷

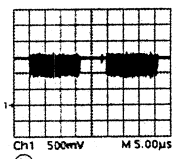

㊸

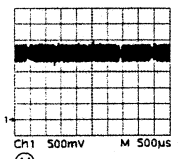

㊹

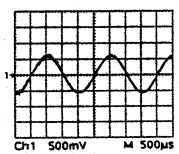

㊺

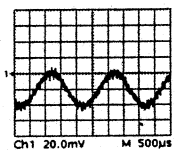

㊻

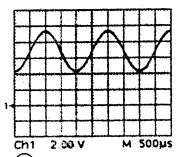

㊼

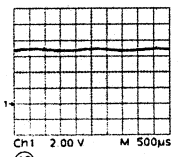

㊽

# IC-Blockschaltpläne / IC Block Circuit Diagrams

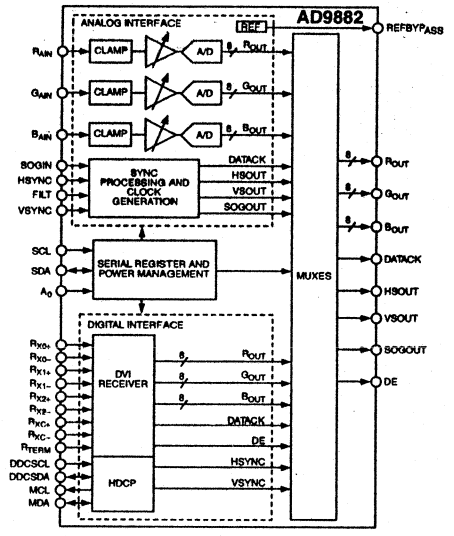


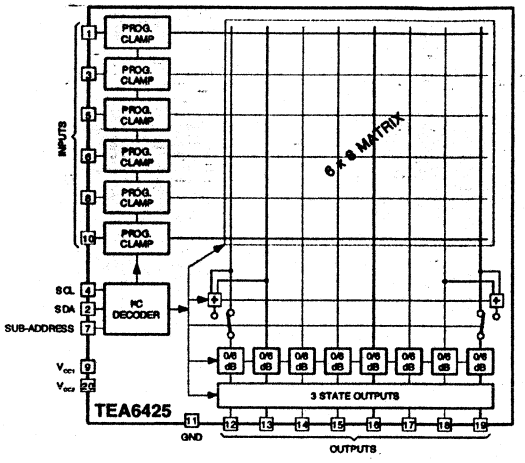


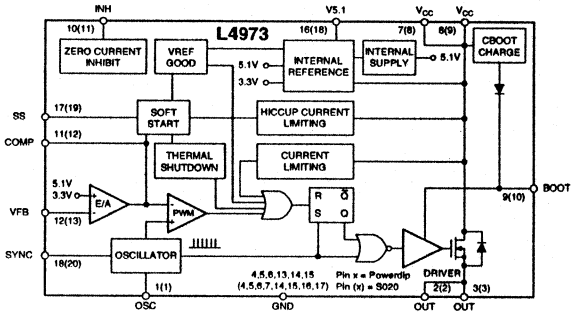


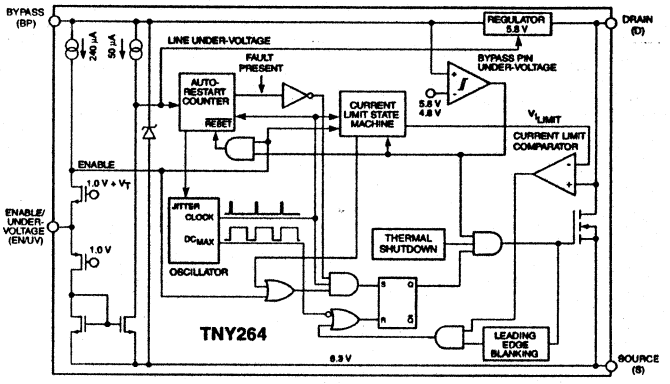


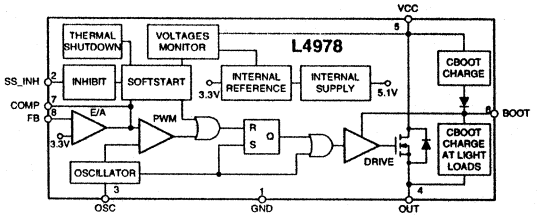


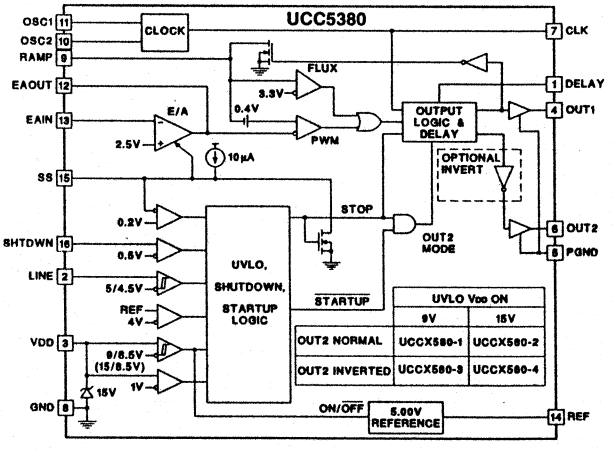


| UVLO Vcc ON | | |
|---|---|---|
| | 9V | 15V |
| OUT2 NORMAL | UCCX580-1 | UCCX580-2 |
| OUT2 INVERTED | UCCX580-3 | UCCX580-4 |

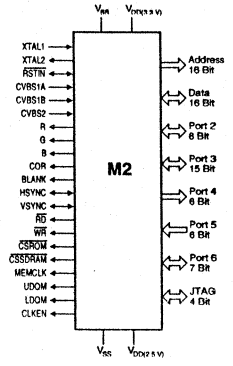


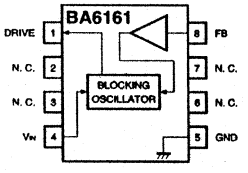


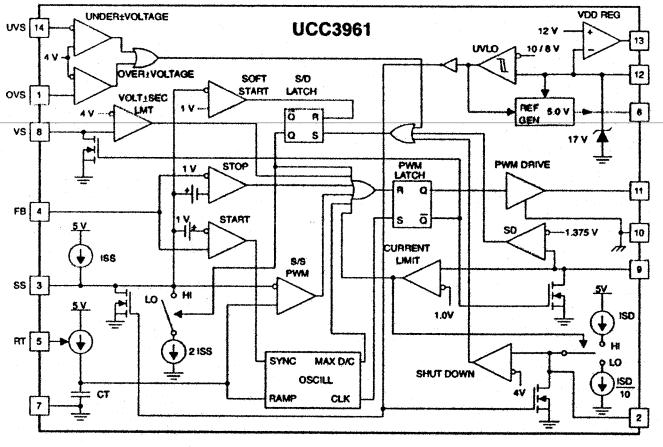


## SVP EX52/51

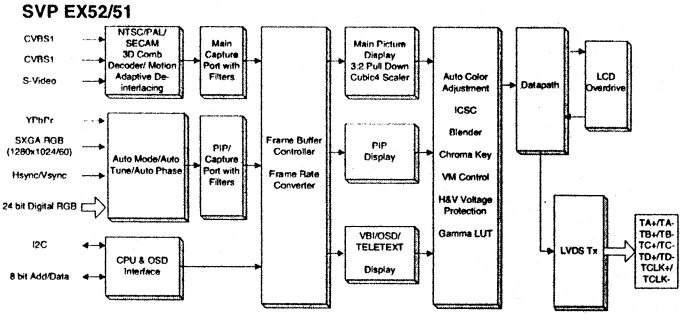

GRUNDIG

Ersatzteilliste
Spare Parts List

NUR FÜR INTERNEN GEBRAUCH
FOR INTERNAL USE ONLY

TV

1 / 2005

# THARUS 26 LW 68-9510 DOLBY

MATERIAL-NR. / PART NO.: 720126009600
BESTELL-NR. / ORDER NO.: GBA5300

| POS. NR. POS. NO. | ABB. FIG. | MATERIAL-NR. PART NUMBER | ANZ. QTY. | BEZEICHNUNG (D) | DESCRIPTION (GB) |
|---|---|---|---|---|---|
| | | 720126009600 | | THARUS 26 LW 68-9510 DOLBY<br>KEIN E-TEIL | THARUS 26 LW 68-9510 DOLBY<br>NO SPARE PART |
| 0001.000 | | 759551096800 | | GEHAEUSEVORDERTEIL SILBER | FRONT COVER SILVER |
| 0002.000 | | 759551097000 | | RUECKWAND | REAR COVER |
| 0004.000 | | 759551097300 | | LAUTSPRECHERGRILL SILBER | SPEAKER GRILL SILVER |
| 0007.000 | | 759551097100 | | LAUTSPRECHER 15 W / 4 OHM | LOUDSPEAKER 15 W / 4 OHM |
| 0008.000 | | 759551097200 | | HOCHTONLAUTSPRECHER 8 W / 8 OHM | TWEETER 8 W / 8 OHM |
| 0009.000 | ⚠ | 759551100900 | | LCD DISPLAY 26" | LCD DISPLAY 26" |
| 0014.000 | ⚠ | 759550962200 | | NETZKABEL | POWER CABLE |
| 0016.000 | | 759551096900 | | KNOPF NETZ | KNOB POWER |
| 0018.000 | | 759551097400 | | FUSS SILBER | FOOT SILVER |
| 0020.000 | | 296420660600 | | TP 150 C FERNBEDIENUNG | TP 150 C REMOTE CONTROL |
| 0028.000 | ⚠ | 275990134800 | X | LP-CHASSISMODUL G1 | CHASSIS BOARD G1 |
| 0030.000 | ⚠ | 275990134900 | X | LP-SCALERMODUL G1 | SCALER BOARD G1 |
| 0040.000 | ⚠ | 275990205200 | X | LP-FRONT PANELMODUL<br>(AV/IR/BA-PLATTE)<br>KEIN E-TEIL | FRONT PANEL BOARD<br>(AV/IR/BA-BOARD)<br>NO SPARE PART |
| 0050.000 | ⚠ | 275990205300 | | LP-SASI PFC MODUL | SASI PFC BOARD |
| 0070.000 | ⚠ | 275990205400 | | LP-SASI FRONT AV MODUL | SASI FRONT AV BOARD |
| 0080.000 | ⚠ | 275990135000 | X | LP-M2 MODUL<br>KEIN E-TEIL | M2 BOARD<br>NO SPARE PART |
| | | 720117089000 | | BEDIENUNGSANLEITUNG D/GB/F/I/NL | INSTRUCTION MANUAL D/GB/F/I/NL |
| | | 720117089100 | | BEDIENUNGSANLEITUNG S/DK/N/FIN/E/P | INSTRUCTION MANUAL S/DK/N/FIN/E/P |
| | | 720100516000 | | SERVICE MANUAL D/GB | SERVICE MANUAL D/GB |
| | | | | X = SIEHE GESONDERTE E-LISTE | X = SEE SEPARATE PARTS LIST |

Es gelten die Vorschriften und Sicherheitshinweise gemäß dem Service Manual "Sicherheit", Mat.-Nummer 720108000001, sowie zusätzlich die eventuell abweichenden, landesspezifischen Vorschriften!

The regulations and safety instructions shall be valid as provided by the "Safety" Service Manual, part number 720108000001, as well as the respective national deviations.

ÄNDERUNGEN VORBEHALTEN / SUBJECT TO ALTERATION

GRUNDIG

Ersatzteilliste
Spare Parts List

NUR FÜR INTERNEN GEBRAUCH
FOR INTERNAL USE ONLY

TV

2 / 2005

# THARUS 30 LW 76-9510 DOLBY

MATERIAL-NR. / PART NO.: 720126010500
BESTELL-NR. / ORDER NO.: GBB1700 SILBER/SILVER

| POS. NR. POS. NO. | ABB. FIG. | MATERIAL-NR. PART NUMBER | ANZ. QTY. | BEZEICHNUNG (D) | DESCRIPTION (GB) |
|---|---|---|---|---|---|
| | | 720126010500 | | THARUS 30 LW 76-9510 DOLBY<br>KEIN E-TEIL | THARUS 30 LW 76-9510 DOLBY<br>NO SPARE PART |
| 0001.000 | | 759551131200 | | GEH.-VORDERTEIL SILBER | FRONT CABINET SILVER |
| 0002.000 | | 759551130500 | | RUECKWAND LIQUA BLUE | BACK COVER LIQUA BLUE |
| 0004.000 | | 759551131100 | | GRILL LAUTSPRECHER SILBER | GRILLE LOUDSPEAKER SILVER |
| 0007.000 | | 759551097100 | | LAUTSPRECHER 15 W / 4 OHM | LOUDSPEAKER 15 W / 4 OHM |
| 0008.000 | | 759551097200 | | HOCHTONLAUTSPRECHER 8 W / 8 OHM | TWEETER 8 W / 8 OHM |
| 0009.000 | ⚠ | 759551115600 | | LCD-DISPLAY T296XW01 | LCD-DISPLAY T296XW01 |
| 0011.000 | | 759551130600 | | VÖRDERTEIL SILBER SOUND SYSTEM | FRONT SILVER SOUND SYSTEM |
| 0012.000 | | 759551130700 | | RUECKTEIL SILBER SOUND SYSTEM | BACK COVER SILVER SOUND SYSTEM |
| 0013.000 | | 759551130900 | | IR ABDECKUNG | IR COVER |
| 0014.000 | ⚠ | 829099122000 | | NETZKABEL | POWER CABLE |
| 0015.000 | | 759551131000 | | FEDER | SPRING |
| 0016.000 | | 759551130400 | | KNOPF NETZ | KNOB POWER |
| 0018.000 | | 759551131300 | | FUSS SILBER | FOOT SILVER |
| 0020.000 | | 296420660600 | | TP 150 C FERNBEDIENUNG SILBER | TP 150 C REMOTE CONTROL SILVER |
| 0028.000 | ⚠ | 275990136800 | X | LP-CHASSISMODUL G1 | CHASSIS BOARD G1 |
| 0030.000 | ⚠ | 275990136900 | X | LP-SCALERMODUL G1 | SCALER BOARD G1 |
| 0040.000 | ⚠ | 275990035700 | X | LP-FRONT PANELMODUL<br>(AV/IR/BA-PLATTE)<br>KEIN E-TEIL | FRONT PANEL BOARD<br>(AV/IR/BA-BOARD)<br>NO SPARE PART |
| 0050.000 | ⚠ | 275990137000 | | LP- SASI-PFC MODUL | SASI-PFC BOARD |
| 0070.000 | ⚠ | 275990137200 | | LP-SASI FRONT MODUL | SASI FRONT BOARD |
| 0080.000 | ⚠ | 275990136700 | X | LP-M2-MODUL | M2 BOARD |
| | | 720117089000 | | BEDIENUNGSANLEITUNG D/GB/F/I/NL | INSTRUCTION MANUAL D/GB/F/I/NL |
| | | 720117089100 | | BEDIENUNGSANLEITUNG S/DK/N/FIN/E/P | INSTRUCTION MANUAL S/DK/N/FIN/E/P |
| | | 720100516000 | | SERVICE MANUAL D/GB | SERVICE MANUAL D/GB |
| | | | | X = SIEHE GESONDERTE E-LISTE | X = SEE SEPARATE PARTS LIST |

Es gelten die Vorschriften und Sicherheitshinweise gemäß dem Service Manual "Sicherheit", Mat.-Nummer 720108000001, sowie zusätzlich die eventuell abweichenden, landesspezifischen Vorschriften!

The regulations and safety instructions shall be valid as provided by the "Safety" Service Manual, part number 720108000001, as well as the respective national deviations.

ÄNDERUNGEN VORBEHALTEN / SUBJECT TO ALTERATION

# GRUNDIG

Ersatzteilliste
Spare Parts List

NUR FÜR INTERNEN GEBRAUCH
FOR INTERNAL USE ONLY

**TV**

## 1 / 2005

## LP-CHASSISMODUL G1
## CHASSIS BOARD G1

MATERIAL-NR. / PART NO.: 275990134800

| POS. NR. POS. NO. | ABB. FIG. | MATERIAL-NR. PART NUMBER | ANZ. QTY. | BEZEICHNUNG (D) | DESCRIPTION (GB) |
|---|---|---|---|---|---|
| | | 275990134800 | | LP-CHASSISMODUL G1 | CHASSIS BOARD G1 |

| POS. NR. POS. NO. | MATERIAL-NR. PART NUMBER | BEZEICHNUNG DESCRIPTION |
|---|---|---|
| BU EURO1 | 759551101700 | SCART BUCHSE |
| BU AV2 | 759551101600 | S-VHS BUCHSE |
| C 60500 ⚠ | 759551146100 | KONDENS. 1NF 400VAC |
| C 60506 ⚠ | 759551146100 | KONDENS. 1NF 400VAC |
| C 60507 ⚠ | 759551146100 | KONDENS. 1NF 400VAC |
| C 60590 ⚠ | 759551146100 | KONDENS. 1NF 400VAC |
| CD 29554 | 830953414900 | MELF-DIODE LL 4148 TFK/ITT |
| CD 29556 | 830953414900 | MELF-DIODE LL 4148 TFK/ITT |
| CD 31014 | 830953414900 | MELF-DIODE LL 4148 TFK/ITT |
| CD 32014 | 830940159200 | SMD DIODE BA591/BA592/BA782 |
| CD 32017 | 830940159200 | SMD DIODE BA591/BA592/BA782 |
| CD 32031 | 830921504400 | DIODE 1 N 4148 |
| CD 40501 | 830953414900 | MELF-DIODE LL 4148 TFK/ITT |
| CD 40522 | 759551098400 | DIODE Z9.1V 1.5W |
| CD 40554 | 830953414900 | MELF-DIODE LL 4148 TFK/ITT |
| CD 41514 | 830953414900 | MELF-DIODE LL 4148 TFK/ITT |
| CD 60540 | 759551098500 | DIODE 18 V 5 W |
| CD 61501 | 759551098400 | DIODE Z9.1V 1.5W |
| CD 61502 | 759551098400 | DIODE Z9.1V 1.5W |
| CD 61503 | 759551098400 | DIODE Z9.1V 1.5W |
| CD 61504 | 830921504400 | DIODE 1 N 4148 |
| CD 61505 | 830921504400 | DIODE 1 N 4148 |
| CD 61505 | 830953414900 | MELF-DIODE LL 4148 TFK/ITT |
| CD 61506 | 830921504400 | DIODE 1 N 4148 |
| CD 61822 | 830921504400 | DIODE 1 N 4148 |
| CD 61833 | 759551098600 | DIODE STPS340U |
| CD 61900 | 759551098600 | DIODE STPS340U |
| CD 61902 | 759551098400 | DIODE Z9.1V 1.5W |
| CIC29550 | 759550542200 | SMD IC M24C08N SC2.7 |
| CIC31010 | 759550542200 | SMD IC M24C08N SC2.7 |
| CIC31015 | 759551097700 | IC BA6161F-E2 |
| CIC32040 | 830584988600 | SMD IC TDA9886T-V3 PHI >> |
| CIC33000 | 759551097600 | IC MSP4411/D5 |
| CIC41540 | 830518285300 | IC PC74HCT4053 |
| CIC43510 | 830577345300 | SMD IC 74HCT4053D SO16 AV21 |
| CIC43520 | 830577345300 | SMD IC 74HCT4053D SO16 AV21 |
| CIC43530 | 830518285300 | IC PC74HCT4053 |
| CIC61530 | 830485358000 | SMD IC UCC3580D-3 SO16 TID |
| CIC61610 | 830598605000 | SMD IC KF50BD-TR SGS AV215- |
| CIC61810 | 759551097500 | IC L 4973D3.3-013TR |
| CT 29510 | 759551098200 | TRANS BC847BPDW1T |
| CT 29530 | 830100484800 | SMD TRANS BC848B/ BC847B P |
| CT 29610 | 759551098100 | TRANS BF799W |

| POS. NR. POS. NO. | MATERIAL-NR. PART NUMBER | BEZEICHNUNG DESCRIPTION |
|---|---|---|
| CT 29615 | 759551098100 | TRANS BF799W |
| CT 29620 | 759880004700 | TRANS.BF 824 |
| CT 29630 | 759551098100 | TRANS BF799W |
| CT 29635 | 759551098100 | TRANS BF799W |
| CT 29640 | 759880004700 | TRANS.BF 824 |
| CT 29660 | 759551098100 | TRANS BF799W |
| CT 29665 | 759551098100 | TRANS BF799W |
| CT 29670 | 759880004700 | TRANS.BF 824 |
| CT 29740 | 759551098200 | TRANS BC847BPDW1T |
| CT 32005 | 830100484800 | SMD TRANS BC848B/ BC847B P |
| CT 32064 | 759551097900 | TRANS BC847BTT1 |
| CT 32065 | 759551097800 | TRANS BC858CLT1 |
| CT 32070 | 759551097900 | TRANS BC847BTT1 |
| CT 32071 | 759551097900 | TRANS BC847BTT1 |
| CT 32075 | 759551097900 | TRANS BC847BTT1 |
| CT 32086 | 759551098000 | TRANS BF824 |
| CT 40550 | 830100385800 | SMD TRANS BC858B/ BC857B P |
| CT 40551 | 830100385800 | SMD TRANS BC858B/ BC857B P |
| CT 41504 | 830100581700 | SMD-TRANS.BC 817-25 |
| CT 41505 | 830100581700 | SMD-TRANS.BC 817-25 |
| CT 41506 | 830100581700 | SMD-TRANS.BC 817-25 |
| CT 41508 | 830100385800 | SMD TRANS BC858B/ BC857B P |
| CT 43571 | 830100484800 | SMD TRANS BC848B/ BC847B P |
| CT 43571 | 830100484800 | SMD TRANS BC848B/ BC847B P |
| CT 43588 | 830100385800 | SMD TRANS BC858B/ BC857B P |
| CT 43589 | 830100484800 | SMD TRANS BC848B/ BC847B P |
| CT 43589 | 759551098700 | TRANS BC848BLT1G |
| CT 43620 | 830100484800 | SMD TRANS BC848B/ BC847B P |
| CT 43625 | 830100385800 | SMD TRANS BC858B/ BC857B P |
| CT 43640 | 830100484800 | SMD TRANS BC848B/ BC847B P |
| CT 43645 | 830100385800 | SMD TRANS BC858B/ BC857B P |
| CT 43660 | 830100484800 | SMD TRANS BC848B/ BC847B P |
| CT 43665 | 830100385800 | SMD TRANS BC858B/ BC857B P |
| CT 43680 | 830100484800 | SMD TRANS BC848B/ BC847B P |
| CT 43685 | 830100385800 | SMD TRANS BC858B/ BC857B P |
| CT 60302 | 830100484800 | SMD TRANS BC848B/ BC847B P |
| CT 60302 | 830100484800 | SMD TRANS BC848B/ BC847B P |
| CT 60511 | 830100484800 | SMD TRANS BC848B/ BC847B P |
| CT 61501 | 830100484800 | SMD TRANS BC848B/ BC847B P |
| CT 61501 | 759551098700 | TRANS BC848BLT1G |
| CT 61502 | 830100484800 | SMD TRANS BC848B/ BC847B P |
| CT 61821 | 759551098700 | TRANS BC848BLT1G |
| CT 61821 | 830100484800 | SMD TRANS BC848B/ BC847B P |
| CT 80205 | 759551098000 | TRANS BF824 |
| CT 80206 | 759551098000 | TRANS BF824 |
| CT 80505 | 830100484800 | SMD TRANS BC848B/ BC847B P |
| CT 80510 | 830100385800 | SMD TRANS BC858B/ BC857B P |

ÄNDERUNGEN VORBEHALTEN / SUBJECT TO ALTERATION

| POS. NR. POS. NO. | MATERIAL-NR. PART NUMBER | BEZEICHNUNG DESCRIPTION |
|---|---|---|
| CT 80551 | 759551097900 | TRANS BC847BTT1 |
| CT 80552 | 830100484800 | SMD TRANS BC848B/ BC847B P |
| CT 84003 | 759551098000 | TRANS BF824 |
| CT 84004 | 759551098000 | TRANS BF824 |
| CT 84026 | 830100484800 | SMD TRANS BC848B/ BC847B P |
| CT 84027 | 830100385800 | SMD TRANS BC858B/ BC857B P |
| D 60501 | 759551100600 | TRAFO DST 29" SF TR/003 |
| D 60516 | 830920002100 | DIODE BAV21 ITT/ TFK AV619 |
| D 60579 | 830951685400 | DIODE BYT 54 M GEG.N.AV 619 |
| D 60581 | 830920401500 | DIODE BY203S-20 TFK AV619 - |
| D 60586 | 830920002100 | DIODE BAV21 ITT/ TFK AV619 |
| D 60587 | 830920002100 | DIODE BAV21 ITT/ TFK AV619 |
| D 61601 | 830919816000 | DIODE STPS1L60 STM |
| D 61604 | 830920002100 | DIODE BAV21 ITT/ TFK AV619 |
| D 61803 | 830920002100 | DIODE BAV21 ITT/ TFK AV619 |
| D 61411 | 830919420300 | DIODE STTH2003CT TO220AB S |
| D 61511 | 830919420300 | DIODE STTH2003CT TO220AB S |
| D 61522 | 830919420300 | DIODE STTH2003CT TO220AB S |
| D 61801 | 830919812500 | DIODE STPS10L25D STM |
| F 32024 | 759550921100 | FILTER OFW K9656M |
| F 32033 | 759550921100 | FILTER OFW K9656M |
| IC 33010 | 830521006500 | IC MC33164P-5RP/ TS831-5IZ/ |
| IC 33080 | 830544007400 | IC TL074ACN TID |
| IC 40801 | 830533738100 | IC TDA7381 |
| IC 41530 | 830521007800 | IC MC33078P MOT |
| IC 43570 | 759880683000 | IC VIDEO SCHALTER TEA6425 |
| IC 60511 | 759551019600 | IC TNY264P |
| IC 61830 | 830520497800 | IC L4978 STM |
| IC 61841 | 759550924900 | IC KA 317 TU |
| IC 61900 | 830520497800 | IC L4978 STM |
| L 31014 | 759550924000 | SPULE 4.7UH |
| L 33001 | 759550624400 | SPULE 10 UH |
| L 60585 | 759875814200 | CHIP SPULE 1.2 UH |
| L 61601 | 759550624400 | SPULE 10 UH |
| L 61511 | 759551101900 | SPULE 59 UH |
| L 61801 | 759551101800 | SPULE 24 UH |
| L 61833 | 814052105800 | SPEICHER-DR 59UH 2,5A EF16/ |
| R 60590 ⚠ | 759550452600 | WIDERST 4,7MOHM1/2W |
| R 62501 ⚠ | 831100059000 | NTC 4,7 OHM 10% 642 12478/T |
| R 62502 | 831140127500 | VDR SIOV-S14K275E2S11M5 B72 |
| R 62503 ⚠ | 759550452600 | WIDERST 4,7MOHM1/2W |
| OK60511 ⚠ | 759551100500 | IC SFH615A-2 OPTOKOPPLER |
| OK60590 ⚠ | 759551100500 | IC SFH615A-2 OPTOKOPPLER |
| Q 32034 | 759550143600 | CER RESONATOR 4MHZ |
| Q 33046 | 759550926200 | QUARZ 18.432 MHZ |
| S 62501 ⚠ | 759550450300 | NETZSCHALTER |
| SI 40521 ⚠ | 759550922700 | SICHERUNG 3.15AT |
| SI 60511 ⚠ | 759535053300 | SICHERUNG 100MA 250V |
| SI 60521 ⚠ | 759880019400 | SICHERUNG 2 A/T |
| SI 62501 ⚠ | 759880546400 | SICHERUNG 2.5AH 250V |
| T 60540 | 759880174100 | TRANS IRFIBC 30 G |
| T 60579 | 830299708000 | TRANS SPP06N80C3 DRAIN GEKR |
| T 60585 | 830220163700 | TRANS.BC 637 SIE/VAL |
| T 61524 | 830328463800 | TRANS BC638-16 <<< AV330 -A |
| T 61530 | 830220163700 | TRANS.BC 637 SIE/VAL |

| POS. NR. POS. NO. | MATERIAL-NR. PART NUMBER | BEZEICHNUNG DESCRIPTION |
|---|---|---|
| TR 60501 ⚠ | 759551100200 | TRAFO SMT EL/60010020A 26/3 |
| TR 60510 ⚠ | 759551101000 | TRAFO STANBY 4 W |
| TR 60520 ⚠ | 759551100300 | TRAFO PULSE 2 W |
| TU 32000 | 759551052100 | TUNER PH UV1316T/SIGH-3 SPL |

Es gelten die Vorschriften und Sicherheitshinweise gemäß dem Service Manual "Sicherheit", Mat.-Nummer 720108000001, sowie zusätzlich die eventuell abweichenden, landesspezifischen Vorschriften!

The regulations and safety instructions shall be valid as provided by the "Safety" Service Manual, part number 720108000001, as well as the respective national deviations.

ÄNDERUNGEN VORBEHALTEN / SUBJECT TO ALTERATION

# GRUNDIG

Ersatzteilliste
Spare Parts List

NUR FÜR INTERNEN GEBRAUCH
FOR INTERNAL USE ONLY

**TV**

## 2 / 2005

## LP-CHASSISMODUL G1
## CHASSIS BOARD G1

MATERIAL-NR. / PART NO.: 275990136800

| POS. NR. POS. NO. | ABB. FIG. | MATERIAL-NR. PART NUMBER | ANZ. QTY. | BEZEICHNUNG (D) | DESCRIPTION (GB) |
|---|---|---|---|---|---|
| | | 275990136800 | | LP-CHASSISMODUL G1 | CHASSIS BOARD G1 |

| POS. NR. POS. NO. | MATERIAL-NR. PART NUMBER | BEZEICHNUNG DESCRIPTION |
|---|---|---|
| BU EURO1 | 759550988800 | SCARTBUCHSE |
| BUAV 2 | 759551101600 | S-VHS BUCHSE |
| C 60500 ⚠ | 759551146100 | KONDENS. 1NF 400VAC |
| C 60506 ⚠ | 759551146100 | KONDENS. 1NF 400VAC |
| C 60507 ⚠ | 759551146100 | KONDENS. 1NF 400VAC |
| C 60579 | 853151068700 | MKT 15 0,033UF 20% 630V |
| C 60590 ⚠ | 759551146100 | KONDENS. 1NF 400VAC |
| CD 29547 | 830953414900 | MELF-DIODE LL 4148 TFK/ITT |
| CD 29554 | 830953414900 | MELF-DIODE LL 4148 TFK/ITT |
| CD 29556 | 830953414900 | MELF-DIODE LL 4148 TFK/ITT |
| CD 29557 | 830953414900 | MELF-DIODE LL 4148 TFK/ITT |
| CD 31014 | 830953414900 | MELF-DIODE LL 4148 TFK/ITT |
| CD 32014 | 830940159200 | SMD DIODE BA591/BA592/BA782 |
| CD 32017 | 830940159200 | SMD DIODE BA591/BA592/BA782 |
| CD 32031 | 830953414900 | MELF-DIODE LL 4148 TFK/ITT |
| CD 40501 | 830953414900 | MELF-DIODE LL 4148 TFK/ITT |
| CD 40522 | 759551098400 | DIODE Z9.1V 1.5W |
| CD 40522 | 759551098400 | DIODE Z9.1V 1.5W |
| CD 40554 | 830953414900 | MELF-DIODE LL 4148 TFK/ITT |
| CD 41514 | 830953414900 | MELF-DIODE LL 4148 TFK/ITT |
| CD 43694 | 830953414900 | MELF-DIODE LL 4148 TFK/ITT |
| CD 43696 | 830953414900 | MELF-DIODE LL 4148 TFK/ITT |
| CD 60539 | 830953414900 | MELF-DIODE LL 4148 TFK/ITT |
| CD 60540 | 759551098400 | DIODE Z9.1V 1.5W |
| CD 60547 | 830953414900 | MELF-DIODE LL 4148 TFK/ITT |
| CD 60561 | 830953414900 | MELF-DIODE LL 4148 TFK/ITT |
| CD 60571 | 759551116000 | DIODE LL 42 |
| CD 60572 | 830953414900 | MELF-DIODE LL 4148 TFK/ITT |
| CD 60585 | 830953414900 | MELF-DIODE LL 4148 TFK/ITT |
| CD 61501 | 759551098400 | DIODE Z9.1V 1.5W |
| CD 61502 | 759551098400 | DIODE Z9.1V 1.5W |
| CD 61503 | 759551098400 | DIODE Z9.1V 1.5W |
| CD 61504 | 830953414900 | MELF-DIODE LL 4148 TFK/ITT |
| CD 61505 | 830953414900 | MELF-DIODE LL 4148 TFK/ITT |
| CD 61506 | 830953414900 | MELF-DIODE LL 4148 TFK/ITT |
| CD 61530 | 830953414900 | MELF-DIODE LL 4148 TFK/ITT |
| CD 61822 | 830953414900 | MELF-DIODE LL 4148 TFK/ITT |
| CD 61833 | 759551098600 | DIODE STPS340U |
| CD 61900 | 759551098600 | DIODE STPS340U |
| CD 61902 | 759551098400 | DIODE Z9.1V 1.5W |
| CD 80510 | 830953414900 | MELF-DIODE LL 4148 TFK/ITT |
| CIC29550 | 759551115800 | SW/IC AT24C08AN-10SI-2.7 |
| CIC31010 | 759551115900 | SW/IC AT24C08AN-10SI-2.7 |
| CIC31015 | 759551097700 | IC BA6161F-E2 |

| POS. NR. POS. NO. | MATERIAL-NR. PART NUMBER | BEZEICHNUNG DESCRIPTION |
|---|---|---|
| CIC32040 | 830584988600 | SMD IC TDA9886T-V3 PHI >> |
| CIC33000 | 759551097600 | IC MSP4411/D5 |
| CIC41540 | 830518285300 | IC PC74HCT4053 |
| CIC43510 | 830518285300 | IC PC74HCT4053 |
| CIC43520 | 830518285300 | IC PC74HCT4053 |
| CIC43530 | 830518285300 | IC PC74HCT4053 |
| CIC60550 | 830485396100 | SMD IC UCC3961D SO14 TID |
| CIC61530 | 830485358000 | SMD IC UCC3580D-3 SO16 TID |
| CIC61610 | 830598605000 | SMD IC KF50BD-TR SGS AV215- |
| CL 61800 | 814054556000 | SMD EMIFIL 1806 BLM41PG600S |
| CT 29510 | 759551098100 | TRANS BF799W |
| CT 29530 | 759551098100 | TRANS BF799W |
| CT 29610 | 759551098100 | TRANS BF799W |
| CT 29615 | 759551098100 | TRANS BF799W |
| CT 29620 | 759880004700 | TRANS.BF 824 *GV400 |
| CT 29630 | 759551098100 | TRANS BF799W |
| CT 29635 | 759551098100 | TRANS BF799W |
| CT 29640 | 759880004700 | TRANS.BF 824 *GV400 |
| CT 29660 | 759551098100 | TRANS BF799W |
| CT 29665 | 759551098100 | TRANS BF799W |
| CT 29670 | 759880004700 | TRANS.BF 824 *GV400 |
| CT 29740 | 759551098100 | TRANS BF799W |
| CT 32004 | 830100484700 | SMD TRANS BC847B |
| CT 32005 | 830100485700 | SMD TRANS BC857B |
| CT 32005 | 830100385800 | SMD TRANS BC858B/ BC857B P |
| CT 32064 | 830100584800 | SMD-TRANS.BC 848 BR >>> |
| CT 32065 | 830100584800 | SMD-TRANS.BC 848 BR >>> |
| CT 32070 | 830100584800 | SMD-TRANS.BC 848 BR >>> |
| CT 32075 | 830100584800 | SMD-TRANS.BC 848 BR >>> |
| CT 32086 | 830100584800 | SMD-TRANS.BC 848 BR >>> |
| CT 40550 | 830100484800 | SMD TRANS BC848B/ BC847B P |
| CT 40551 | 830100484800 | SMD TRANS BC848B/ BC847B P |
| CT 41508 | 830100484800 | SMD TRANS BC848B/ BC847B P |
| CT 43571 | 830100484800 | SMD TRANS BC848B/ BC847B P |
| CT 43588 | 830100484800 | SMD TRANS BC848B/ BC847B P |
| CT 43589 | 830100484800 | SMD TRANS BC848B/ BC847B P |
| CT 43620 | 759551098100 | TRANS BF799W |
| CT 43625 | 830100385800 | SMD TRANS BC858B/ BC857B P |
| CT 43625 | 830100485700 | SMD TRANS BC857B |
| CT 43640 | 759551098100 | TRANS BF799W |
| CT 43645 | 830100485700 | SMD TRANS BC857B |
| CT 43645 | 830100385800 | SMD TRANS BC858B/ BC857B P |
| CT 43660 | 759551098100 | TRANS BF799W |
| CT 43665 | 830100485700 | SMD TRANS BC857B |
| CT 43665 | 830100385800 | SMD TRANS BC858B/ BC857B P |

ÄNDERUNGEN VORBEHALTEN / SUBJECT TO ALTERATION

| POS. NR. POS. NO. | MATERIAL-NR. PART NUMBER | BEZEICHNUNG DESCRIPTION |
|---|---|---|
| CT 43680 | 759551098100 | TRANS BF799W |
| CT 43685 | 830100385800 | SMD TRANS BC858B/ BC857B P |
| CT 43685 | 830100485700 | SMD TRANS BC857B |
| CT 60302 | 830100484800 | SMD TRANS BC848B/ BC847B P |
| CT 61501 | 830100484800 | SMD TRANS BC848B/ BC847B P |
| CT 61502 | 830100484800 | SMD TRANS BC848B/ BC847B P |
| CT 61821 | 759551098700 | TRANS BC848BLT1G |
| CT 80205 | 830100584800 | SMD-TRANS.BC 848 BR >>> |
| CT 80206 | 830100581800 | SMD TRANS BC818-25/ BC817-2 |
| CT 80505 | 759551098100 | TRANS BF799W |
| CT 80510 | 830100484800 | SMD TRANS BC848B/ BC847B P |
| CT 80551 | 830100584800 | SMD-TRANS.BC 848 BR >>> |
| CT 80552 | 759551098100 | TRANS BF799W |
| CT 84003 | 830100581800 | SMD TRANS BC818-25/ BC817-2 |
| CT 84004 | 830100581800 | SMD TRANS BC818-25/ BC817-2 |
| CT 84026 | 830100584800 | SMD-TRANS.BC 848 BR >>> |
| CT 84027 | 830100385800 | SMD TRANS BC858B/ BC857B P |
| CT 84027 | 830100485700 | SMD TRANS BC857B |
| D 60501 | 759551130100 | DIODE FBI2L-5S2 |
| D 60516 | 830920002100 | DIODE BAV21 ITT/ TFK AV619 |
| D 60579 | 830951685400 | DIODE BYT 54 M GEG.N.AV 619 |
| D 60581 | 830920401500 | DIODE BY203S-20 TFK AV619 - |
| D 60586 | 830920002100 | DIODE BAV21 ITT/ TFK AV619 |
| D 60587 | 830920002100 | DIODE BAV21 ITT/ TFK AV619 |
| D 60588 | 759550577400 | Z-DIODE BZX55-C13V |
| D 61411 | 830919420300 | DIODE STTH2003CT TO220AB S |
| D 61511 | 830919420300 | DIODE STTH2003CT TO220AB S |
| D 61522 | 830919420300 | DIODE STTH2003CT TO220AB S |
| D 61531 | 759550577400 | Z-DIODE BZX55-C13V |
| D 61601 | 830919816000 | DIODE STPS1L60 STM |
| D 61604 | 830920002100 | DIODE BAV21 ITT/ TFK AV619 |
| D 61801 | 830919812500 | DIODE STPS10L25D STM |
| D 61803 | 830920002100 | DIODE BAV21 ITT/ TFK AV619 |
| F 32023 | 759550921100 | FILTER OFW K9656M |
| F 32024 | 759880432300 | SAW FILTER OFWK3953M |
| IC 33010 | 759551116100 | IC MC33164P-5RP |
| IC 33080 | 830544007400 | IC TL074ACN TID |
| IC 40801 | 830533738600 | IC TDA7386 SGS |
| IC 41530 | 830521007800 | IC MC33078P MOT |
| IC 43570 | 759880683000 | IC VIDEO SCHALTER TEA6425 |
| IC 60511 | 759551061200 | IC TNY264PN DIP8 |
| IC 61604 | 830546543100 | IC TS431IZ-AP STM |
| IC 61830 | 830520497800 | IC L4978 STM |
| IC 61841 | 759880752800 | IC LM317T |
| IC 61900 | 830520497800 | IC L4978 STM |
| L 31014 | 759550924000 | SPULE 4.7UH |
| L 32051 | 759550660700 | TRANS. DTC114TSA |
| L 33001 | 759550624400 | SPULE 10 UH |
| L 60585 | 759675814200 | CHIP SPULE 1.2 UH |
| L 61511 | 759551101900 | SPULE 59 UH |
| L 61518 | 759880601600 | SPULE 1.1UH |
| L 61601 | 759550624400 | SPULE 10 UH |
| L 61801 | 759551101800 | SPULE 24 UH |
| L 61833 | 814052105800 | SPEICHER-DR 59UH 2,5A EF16/ |
| OK60511 ⚠ | 759551100500 | IC SFH615A-2 OPTOKOPPLER |
| OK60590 ⚠ | 759551100500 | IC SFH615A-2 OPTOKOPPLER |
| Q 32034 | 759550143600 | CER RESONATOR 4MHZ |
| Q 33046 | 759550967400 | QUARZ 18.432MHZ +-30PPM |
| R 60590 ⚠ | 759550452600 | WIDERST 4,7MOHM1/2W |
| R 62501 ⚠ | 831100059000 | NTC 4,7 OHM 10% 642 12478/T |

| POS. NR. POS. NO. | MATERIAL-NR. PART NUMBER | BEZEICHNUNG DESCRIPTION |
|---|---|---|
| R 62502 | 831140127500 | VDR SIOV-S14K275E2S11M5 B72 |
| R 62503 ⚠ | 759550452600 | WIDERST 4,7MOHM1/2W |
| S 62501 ⚠ | 759550450300 | NETZSCHALTER |
| SI 40521 ⚠ | 759550922700 | SICHERUNG 3.15AT |
| SI 60511 ⚠ | 759535053300 | SICHERUNG 100MA 250V |
| SI 60521 ⚠ | 759836610000 | SICHERUNG T2A/250V QFS-C202 |
| SI 62501 ⚠ | 759880546400 | SICHERUNG 2.5AH 250V |
| T 60540 | 759550951300 | TRANS TRN STP4NK60ZFP |
| T 60579 | 830299708000 | TRANS SPP06N80C3 DRAIN GEKR |
| T 60585 | 830220163700 | TRANS.BC 637 SIE/VAL |
| T 61524 | 830328463800 | TRANS BC638-16 <<< AV330 -A |
| T 61530 | 830220163700 | TRANS.BC 637 SIE/VAL |
| TR60501 ⚠ | 759551100200 | TRAFO SMT EL/60010020A 26/3 |
| TR60510 ⚠ | 759551101000 | TRAFO STANDBY 4W |
| TR60520 ⚠ | 759551100300 | TRAFO PULSE 2 W |
| TU 32000 | 759551052100 | TUNER PH UV1316T/SIGH-3 SPL |

Es gelten die Vorschriften und Sicherheitshinweise gemäß dem Service Manual "Sicherheit", Mat.-Nummer 720108000001, sowie zusätzlich die eventuell abweichenden, landesspezifischen Vorschriften!

⚠ (!)

The regulations and safety instructions shall be valid as provided by the "Safety" Service Manual, part number 720108000001, as well as the respective national deviations.

ÄNDERUNGEN VORBEHALTEN / SUBJECT TO ALTERATION

GRUNDIG

Ersatzteilliste
Spare Parts List

NUR FÜR INTERNEN GEBRAUCH
FOR INTERNAL USE ONLY

TV

## 1 / 2005

## LP-M2 MODUL
## M2 BOARD

MATERIAL-NR. / PART NO.: 275990135000

| POS. NR. POS. NO. | ABB. FIG. | MATERIAL-NR. PART NUMBER | ANZ. QTY. | BEZEICHNUNG (D) | DESCRIPTION (GB) |
|---|---|---|---|---|---|
| | | 275990135000 | | LP-M2 MODUL<br>KEIN E-TEIL | M2 BOARD<br>NO SPARE PART |

| POS. NR. POS. NO. | MATERIAL-NR. PART NUMBER | BEZEICHNUNG DESCRIPTION |
|---|---|---|
| CD 80259 | 833050414800 | MELF DIODE MCL4148 |
| CIC80000 | 759550970400 | IC SDA 6000-A23 (M2) |
| CIC80240 | 830595078600 | SMD IC 74V1G86S STM AV215- |
| CIC80251 | 759551099100 | IC LM 809M3X-3.08 SOT |
| CIC82001 | 720086704000 | FILTER MBM29LV160B PROG. |
| CIC82031 | 830595078600 | SMD IC 74V1G86S STM AV215- |
| CIC82041 | 759551099500 | IC AM29DL323GT90EI |
| CT 80110 | 830100484800 | SMD TRANS BC848B/BC847B |
| CT 80119 | 830100484800 | SMD TRANS BC848B/BC847B |
| CT 80308 | 830100484800 | SMD TRANS BC848B/BC847B |
| Q 80205 | 759550967500 | QUARZ 6 MHZ CL 20 PF |

| POS. NR. POS. NO. | MATERIAL-NR. PART NUMBER | BEZEICHNUNG DESCRIPTION |
|---|---|---|

Es gelten die Vorschriften und Sicherheitshinweise gemäß dem Service Manual "Sicherheit", Mat.-Nummer 720108000001, sowie zusätzlich die eventuell abweichenden, landesspezifischen Vorschriften!

The regulations and safety instructions shall be valid as provided by the "Safety" Service Manual, part number 720108000001, as well as the respective national deviations.

ÄNDERUNGEN VORBEHALTEN / SUBJECT TO ALTERATION



GRUNDIG

Ersatzteilliste
Spare Parts List

NUR FÜR INTERNEN GEBRAUCH
FOR INTERNAL USE ONLY

TV

## 2 / 2005

## LP-M2 MODUL
## M2 BOARD

MATERIAL-NR. / PART NO.: 275990136700

| POS. NR. POS. NO. | ABB. FIG. | MATERIAL-NR. PART NUMBER | ANZ. QTY. | BEZEICHNUNG (D) | DESCRIPTION (GB) |
|---|---|---|---|---|---|
| | | 275990136700 | | LP-M2 MODUL | M2 BOARD |

| POS. NR. POS. NO. | MATERIAL-NR. PART NUMBER | BEZEICHNUNG DESCRIPTION |
|---|---|---|
| CD 80259 | 833050414800 | MELF DIODE MCL4148 |
| CIC80000 | 759550970400 | IC SDA 6000-A23 (M2) |
| CIC80240 | 830598602500 | SMD IC KF25BD-TR SO8 STM |
| CIC80251 | 759551099100 | IC LM 809M3X-3.08 SOT |
| CIC82001 | 759551115700 | SW/IC MBM26LV160B |
| CIC82031 | 830595078600 | SMD IC 74V1G86S STM AV215- |
| CIC82041 | 759551099500 | IC AM29DL323GT90EI |
| CT 80110 | 759551098300 | TRANS BC847BDW1T1 |
| CT 80119 | 759551098300 | TRANS BC847BDW1T1 |
| CT 80308 | 759551098300 | TRANS BC847BDW1T1 |
| Q 80205 | 759550967500 | QUARZ 6 MHZ CL 20 PF |

| POS. NR. POS. NO. | MATERIAL-NR. PART NUMBER | BEZEICHNUNG DESCRIPTION |
|---|---|---|

Es gelten die Vorschriften und Sicherheitshinweise gemäß dem Service Manual "Sicherheit", Mat.-Nummer 720108000001, sowie zusätzlich die eventuell abweichenden, landesspezifischen Vorschriften!

The regulations and safety instructions shall be valid as provided by the "Safety" Service Manual, part number 720108000001, as well as the respective national deviations.

ÄNDERUNGEN VORBEHALTEN / SUBJECT TO ALTERATION

GRUNDIG

Ersatzteilliste
Spare Parts List

NUR FÜR INTERNEN GEBRAUCH
FOR INTERNAL USE ONLY

TV

## 1 / 2005

**LP-SCALERMODUL G1**
**SCALER BOARD G1**
MATERIAL-NR. / PART NO.: 275990134900

| POS. NR. POS. NO. | ABB. FIG. | MATERIAL-NR. PART NUMBER | ANZ. QTY. | BEZEICHNUNG (D) | DESCRIPTION (GB) |
|---|---|---|---|---|---|
| | | 275990134900 | | LP-SCALERMODUL G1 | SCALER BOARD G1 |

| POS. NR. POS. NO. | MATERIAL-NR. PART NUMBER | BEZEICHNUNG DESCRIPTION |
|---|---|---|
| CIC74120 | 830518285300 | IC PC74HCT4053 |
| CIC74130 | 830518285300 | IC PC74HCT4053 |
| CIC74140 | 830518285300 | IC PC74HCT4053 |
| CIC74140 | 830577345300 | SMD IC 74HCT4053D SO16 AV21 |
| CIC74280 | 759551099100 | IC LM 809M3X-3.08 SOT |
| CIC74290 | 830599160900 | SMD IC LM809M3X-3.08 NSC/ |
| CIC74300 | 759551098900 | IC AD9882KST-100TRAY |
| CIC74400 | 759551101400 | IC SVPEX52 7052 QFP256 |
| CIC74420 | 759551101300 | IC STM LD1085D2M-R |
| CIC74610 | 830598602500 | SMD IC KF25BD-TR SO8 STM |
| CIC74630 | 759551099300 | IC K4D263238G-GC36T00 |
| CNL74472 | 759551099400 | FILTER DLP31DN900ML4 |
| CNL74474 | 759551099400 | FILTER DLP31DN900ML4 |
| CNL74476 | 759551099400 | FILTER DLP31DN900ML4 |
| CQ 74440 | 759880544700 | QUARZ 14.31818 MHZ |
| CT 74011 | 830100385800 | SMD TRANS BC 858B/BC857 |
| CT 74020 | 830100385800 | SMD TRANS BC 858B/BC857 |
| CT 74040 | 830100385800 | SMD TRANS BC 858B/BC857 |
| CT 74060 | 830100385800 | SMD TRANS BC 858B/BC857 |
| CT 74160 | 830100484700 | SMD TRANS BC847B |
| CT 74165 | 830100484700 | SMD TRANS BC847B |
| CT 74170 | 830100484700 | SMD TRANS BC847B |
| CT 74175 | 830100484700 | SMD TRANS BC 847B |
| CT 74180 | 830100485700 | SMD TRANS BC857B |
| CT 74185 | 830100485700 | SMD TRANS BC857B |
| CT 74190 | 830100485700 | SMD TRANS BC857B |
| CT 74280 | 830100484700 | SMD TRANS BC847B |
| CT 74290 | 830100484700 | SMD TRANS BC847B |
| CT 74291 | 830100484700 | SMD TRANS BC847B |
| CT 74390 | 830100484700 | SMD TRANS BC847B |
| CT 74504 | 830100485700 | SMD TRANS BC857B |
| CT 74508 | 830100484700 | SMD TRANS BC847B |
| CT 74967 | 830100385800 | SMD TRANS BC 858B/BC857 |
| CT 74968 | 830100385800 | SMD TRANS BC 858B/BC857 |
| CT 74969 | 830100385800 | SMD TRANS BC 858B/BC857P |

Es gelten die Vorschriften und Sicherheitshinweise gemäß dem Service Manual "Sicherheit", Mat.-Nummer 720108000001, sowie zusätzlich die eventuell abweichenden, landesspezifischen Vorschriften!

The regulations and safety instructions shall be valid as provided by the "Safety" Service Manual, part number 720108000001, as well as the respective national deviations.

ÄNDERUNGEN VORBEHALTEN / SUBJECT TO ALTERATION



GRUNDIG

Ersatzteilliste
Spare Parts List

NUR FÜR INTERNEN GEBRAUCH
FOR INTERNAL USE ONLY

TV

## 2 / 2005

**LP-SCALERMODUL G1**
**SCALER BOARD G1**
MATERIAL-NR. / PART NO.: 275990136900

| POS. NR. POS. NO. | ABB. FIG. | MATERIAL-NR. PART NUMBER | ANZ. QTY. | BEZEICHNUNG (D) | DESCRIPTION (GB) |
|---|---|---|---|---|---|
| | | 275990136900 | | LP-SCALERMODUL G1 | SCALER BOARD G1 |

| POS. NR. POS. NO. | MATERIAL-NR. PART NUMBER | BEZEICHNUNG DESCRIPTION |
|---|---|---|
| CIC74120 | 759551116300 | IC 74HCT4053 T&R |
| CIC74120 | 759551116300 | IC 74HCT4053 T&R |
| CIC74130 | 759551116300 | IC 74HCT4053 T&R |
| CIC74140 | 759551116300 | IC 74HCT4053 T&R |
| CIC74280 | 830599160900 | SMD IC LM809M3X-3.08 NSC/ |
| CIC74290 | 759551116400 | IC 74HCT157D SO16/SOT109 |
| CIC74300 | 759551098900 | IC AD9882KST-100TRAY |
| CIC74400 | 759551101400 | IC SVPEX52 7052 QFP256 |
| CIC74420 | 759551101300 | IC STM LD1085D2M-R |
| CIC74610 | 830598602500 | SMD IC KF25BD-TR SO8 STM |
| CIC74630 | 759551099300 | IC K4D263238G-GC36T00 |
| CNL74472 | 759551099400 | FILTER DLP31DN900ML4 |
| CNL74474 | 759551099400 | FILTER DLP31DN900ML4 |
| CNL74476 | 759551099400 | FILTER DLP31DN900ML4 |
| CQ 74440 | 759880544700 | QUARZ 14.31818 MHZ |
| CT 74011 | 830100385800 | SMD TRANS BC858B/ BC857B P |
| CT 74020 | 830100385800 | SMD TRANS BC858B/ BC857B P |
| CT 74040 | 830100385800 | SMD TRANS BC858B/ BC857B P |
| CT 74060 | 830100385800 | SMD TRANS BC858B/ BC857B P |
| CT 74160 | 830100484700 | SMD TRANS BC847B |
| CT 74165 | 830100484700 | SMD TRANS BC847B |
| CT 74170 | 830100484700 | SMD TRANS BC847B |
| CT 74175 | 759551098200 | TRANS BC847BPDW1T |
| CT 74180 | 830100485700 | SMD TRANS BC857B |
| CT 74185 | 830100485700 | SMD TRANS BC857B |
| CT 74190 | 830100485700 | SMD TRANS BC857B |
| CT 74280 | 830100484700 | SMD TRANS BC847B |
| CT 74290 | 830100484700 | SMD TRANS BC847B |
| CT 74291 | 830100484700 | SMD TRANS BC847B |
| CT 74390 | 830100484700 | SMD TRANS BC847B |
| CT 74504 | 830100485700 | SMD TRANS BC857B |
| CT 74508 | 830100484700 | SMD TRANS BC847B |
| CT 74967 | 830100385800 | SMD TRANS BC858B/ BC857B P |
| CT 74968 | 830100385800 | SMD TRANS BC858B/ BC857B P |
| CT 74969 | 830100385800 | SMD TRANS BC858B/ BC857B P |

Es gelten die Vorschriften und Sicherheitshinweise gemäß dem Service Manual "Sicherheit", Mat.-Nummer 720108000001, sowie zusätzlich die eventuell abweichenden, landesspezifischen Vorschriften!

The regulations and safety instructions shall be valid as provided by the "Safety" Service Manual, part number 720108000001, as well as the respective national deviations.

ÄNDERUNGEN VORBEHALTEN / SUBJECT TO ALTERATION

GRUNDIG

Ersatzteilliste
Spare Parts List

NUR FÜR INTERNEN GEBRAUCH
FOR INTERNAL USE ONLY

TV

## 1 / 2005

## LP-FRONT PANELMODUL
## FRONT PANEL BOARD

MATERIAL-NR. / PART NO.: 275990205200

| POS. NR. POS. NO. | ABB. FIG. | MATERIAL-NR. PART NUMBER | ANZ. QTY. | BEZEICHNUNG (D) | DESCRIPTION (GB) |
|---|---|---|---|---|---|
| | | 275990205200 | | LP-FRONT PANELMODUL (AV/IR/BA-PLATTE) KEIN E-TEIL | FRONT PANEL BOARD (AV/IR/BA-BOARD) NO SPARE PART |

| POS. NR. POS. NO. | MATERIAL-NR. PART NUMBER | BEZEICHNUNG DESCRIPTION |
|---|---|---|
| BU EURO2 | 759551146400 | SCART BUCHSE |
| CD 84025 | 759551099700 | LED Q62703Q4316 |
| CIC 63 | 759550945300 | IC AT24C08AN-10SI-2.7 |
| CIC 84025 | 830483463600 | SMD IC TSOP6236 VIS |
| CL 65 | 810498231400 | SMD DAEMPF-PERLE 0603 BLM18 |
| CT 1 | 830100484800 | SMD TRANS BC848B/ BC847B P |
| CT 2 | 830100485700 | SMD TRANS BC857B |
| CT 3 | 830100485700 | SMD TRANS BC857B |
| CT 4 | 830100484800 | SMD TRANS BC848B/ BC847B P |
| CT 62 | 830100484800 | SMD TRANS BC848B/ BC847B P |
| CT 63 | 830100484800 | SMD TRANS BC848B/ BC847B P |
| CT 84025 | 830100484800 | SMD TRANS BC848B/ BC847B P |

Es gelten die Vorschriften und Sicherheitshinweise gemäß dem Service Manual "Sicherheit", Mat.-Nummer 720108000001, sowie zusätzlich die eventuell abweichenden, landesspezifischen Vorschriften!

The regulations and safety instructions shall be valid as provided by the "Safety" Service Manual, part number 720108000001, as well as the respective national deviations.

ÄNDERUNGEN VORBEHALTEN / SUBJECT TO ALTERATION



GRUNDIG

Ersatzteilliste
Spare Parts List

NUR FÜR INTERNEN GEBRAUCH
FOR INTERNAL USE ONLY

TV

## 2 / 2005

## LP-FRONT PANELMODUL
## FRONT PANEL BOARD

MATERIAL-NR. / PART NO.: 275990035700

| POS. NR. POS. NO. | ABB. FIG. | MATERIAL-NR. PART NUMBER | ANZ. QTY. | BEZEICHNUNG (D) | DESCRIPTION (GB) |
|---|---|---|---|---|---|
| | | 275990035700 | | LP-BEDIENMODUL (AV/IR/BA-PLATTE) KEIN E-TEIL | FRONT PANEL BOARD (AV/IR/BA-BOARD) NO SPARE PART |

| POS. NR. POS. NO. | MATERIAL-NR. PART NUMBER | BEZEICHNUNG DESCRIPTION |
|---|---|---|
| BU EURO2 | 759551146400 | SCART BUCHSE |
| CD 84025 | 759551099700 | LED Q62703Q4316 |
| CIC63 | 759551116200 | IC/SW AT24C08AN-10SI-2.7 |
| CIC84025 | 830483463600 | SMD IC TSOP6236 VIS |
| CT 1 | 830100484800 | SMD TRANS BC848B/ BC847B P |
| CT 2 | 830100685700 | SMD-TRANS.BC 857 C |
| CT 3 | 830100685700 | SMD-TRANS.BC 857 C |
| CT 4 | 830100484800 | SMD TRANS BC848B/ BC847B P |
| CT 62 | 830100484800 | SMD TRANS BC848B/ BC847B P |
| CT 63 | 830100484800 | SMD TRANS BC848B/ BC847B P |
| CT 84025 | 830100484800 | SMD TRANS BC848B/ BC847B P |

Es gelten die Vorschriften und Sicherheitshinweise gemäß dem Service Manual "Sicherheit", Mat.-Nummer 720108000001, sowie zusätzlich die eventuell abweichenden, landesspezifischen Vorschriften!

The regulations and safety instructions shall be valid as provided by the "Safety" Service Manual, part number 720108000001, as well as the respective national deviations.

ÄNDERUNGEN VORBEHALTEN / SUBJECT TO ALTERATION